ZY8810 LED Emergency Light

Ordering reference

Model number	Rated wattage (W)	Emergency wattage (W)	Emergency duration (h)	Light output of light source(lm)	Mounting height (m)	Equivalent to Fluorescent lamp
ZY8810-L12	12W	6W	>10h	1800	2~5	28W
ZY8810-L6	6W	4W	>10h	900		18W

Drawing of Dimension (Dimensions in mm)

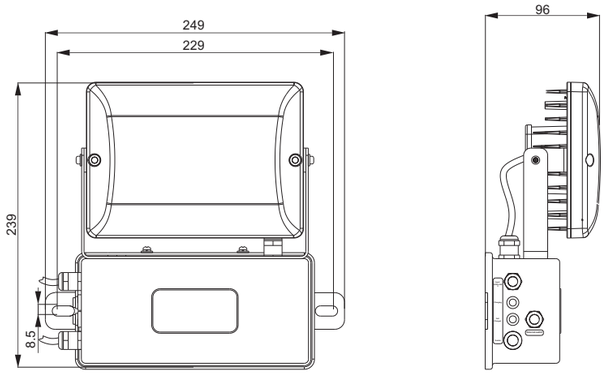

ZLQ3140 Series Emergency Box



Application

- This product is widely used for wide-angle lighting, industrial workshops, power plants, substations, tunnels and other places for work lighting;
- Suitable for places with high humidity, corrosion resistance and protection requirements.

Characteristics

- Adopt engineering plastic shell and 304 stainless steel fastern, with excellent anti-corrosion performance;
- Adopting labyrinth waterproof sealing structure, the shell protection level reaches IP66, which can effectively resist heavy rain and is suitable for various harsh industrial working environments;
- A variety of emergency modes, suitable for a variety of lamps and various different places.

Applicable light type



ZY5323 ZM1200 ZY8601



ZY8607 ZY9710 ZY8106



ZY8102D ZY8507

Main Specification

Item	ZLQ3140-L50-L5	ZLQ3140-L40-L15/25	ZLQ3140-L5/10	ZLQ3140-L15/25
Rated voltage	AC 100~240V			
Lighting wattage	50W	40W	≤200W	≤200W
Emergency wattage	5W	15/25W	5/10W	15/25W
Suitable light source voltage	DC 27~54V	DC 30~40V	DC 3~42V	DC 36V/DC 54V
Emergency time	≥90min	≥180min/≥90min	≥180min/≥90min	≥180min/≥90min
Battery voltage	7.4V	14.8V	7.4V	14.8V
IP code	IP66			
Ambient temperature	-25℃~+55℃			
Suitable cable diameter	Φ4～Φ8mm / Φ6～Φ12mm(Could be customized)			
Size	220×150×75mm			
Installation angle	360°			
Net weight	1.5Kg			