BC9309S LED Explosion Proof Light (Bracket -Spotlight)

Ex
IP 66
Ta 40/55
Ta -50



Ex marking: Ex nR IIC T3/T4 Gc
Ex tD A21 IP66 T195℃/ T130℃

Application

- Ideal to be used in the oilfield, chemical industry, offshore drilling platform, steel industry, petroleum etc.



Characteristics

- Super power, maximum power up to 480W, can replace more than 1000W metal halide lamps and sodium lamps.
- Housing made of special aluminum processing, hardware and brackets adopt 304 stainless steel, using high-tech anti-corrosion surface treatment technology, can be long-term suitable for seaside, chlor-alkali, hydrogen sulfide and other highly corrosive areas.
- Superconducting aluminum comprehensive self-loop thermal design, long-term suitable for operating environment with high temperature and high humidity. Upper and lower ventilation fin structure, no dust.
- Variety of light distribution, variety of installation types, same shape, an effective solution to beautify workshop and device platform.
- It adopts Imported light source, no dark zone in light spot, no ghosting, can save 60% or more on energy than the metal halide lamp.
- AC and DC wide voltage constant power supply, power factor above 0.98.
- It can quickly replace the light source without welding.
- Independent wiring chamber, safe and convenient for installation and maintenance.
- According to user needs, can choose light fixtures with a variety of intelligent control.

Main Specification

Item	Technical Parameters
Rated voltage (V)	200~277VAC
Rated frequency	50Hz / 60Hz
Light source	LED
Life time (h)	50,000
CRI	Ra 70 (80 optional)
CCT	5000K(3000K/4000K optional)
Leading-in cable diameter	Φ8mm~ Φ12mm
Dimension (mm)	602×270×340
Net Weight (kg)	13.5



BC9309S LED Explosion Proof Light (Bracket -Spotlight)

Ordering reference

Model Number	Picture	Rated wattage (W)	Light output (lm)	Light distribution Curve(1000cd/lm)	Equivalent to MH
BC9309S□-L240-18°		240W	23000	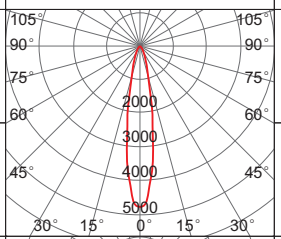	600W
BC9309S□-L300-18°		300W	29200		600W-1000W
BC9309S□-L400-25°		400W	40600	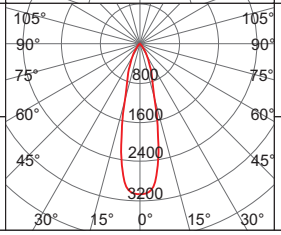	1000W
BC9309S□-L480-25°		480W	47000		＞1000W

Note : order number "□" according to the actual installation needs fill in 1 or 2, S1 straight stent, S2 angle bracket.

Drawing of dimension (Dimensions in mm)

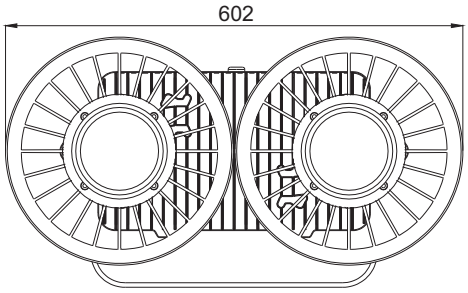

Seat mountingS1

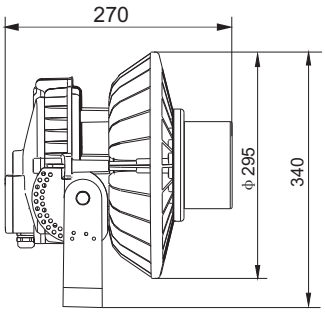

BC9309S1

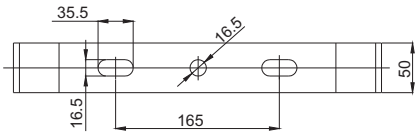

Installation Dimension

Seat mountingS2

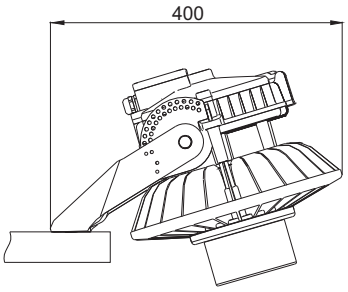

BC9309S2