ZY8507 Series LED High Bay light

TORMIN



Application

The products are widely used in high-shed factories, workshops, warehouses, logistics centers, exhibition halls, gymnasiums, shipyards, highway toll stations, gas stations, supermarkets, farmer's markets, and other places that require large-area lighting.

Light distribution curve

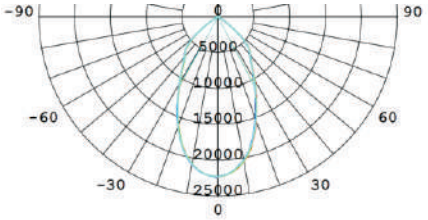

Average Beam Angle(50%): 56.8degree

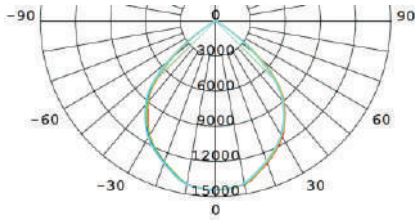

Average Beam Angle(50%): 91.0degree

Characteristics

1. Multiple high-power light sources are evenly distributed and separated in the power supply design, with good heat dissipation effect, long life of the lamp, suitable for high temperature and high humidity working environment;

2. The light has high dustproof, waterproof, and shock resistance, and the protection level is up to IP66, which is suitable for various large-area roof-mounted industrial operating environments;

3. The Chinese renowned brand light source, the overall light efficiency is up to 120lm/W on average, which is more than 60% energy-saving compared with the same period in the metal halide lamp;

4. Use high-end brand aluminum housing sealant outdoor special power supply, wide input range, constant current and constant voltage output, high power factor, high efficiency, anti-lightning surge, and ensure long-term stable and efficient output of lamps.

Main Specification

Item	Technical Parameters
Input voltage	90~264VAC
Rated frequency	50Hz / 60Hz
Rated wattage	50W~400W
Light source	LED
Life time of light source	100,000hrs
CRI	Ra 70
CCT	5000K (3000K/ 4000K customized)
Ingress protection	IP66

Ordering Reference

Model number	Photo	Rated wattage (W)	Light output (lm)	Net weight (Kg)	Space height ratio	Mounting height	Dimensions (mm)	Equivalent to HPS
ZY8507A/B-L50-60°		50	6010	2.9	0. 65	5~8m	Φ353X248(H)	100W
ZY8507A/B-L100-60°		100	12020	3.7			Φ353X274(H)	250W
ZY8507A/B-L150-60°		150	18030	4.5		8~15m	Φ353X305(H)	400W
ZY8507A/B-L200-60°		200	25440	5.0	1.4		Φ353X355(H)	400W~600W
ZY8507A/B-L250-60°		250	31600	5.6		15~20m	Φ353X385(H)	600W

TORMIN ZY8507 Series LED High Bay light

Ordering Reference

Model number	Photo	Rated wattage (W)	Light output (lm)	Net weight (Kg)	Space height ratio	Mounting height	Dimensions (mm)	Equivalent to HPS
ZY8507A-L300-60°		300	37900	7.2	1.4	15~20m	Φ353X500(H)	600W~1000W
ZY8507A-L400-60°		400	50600	9		20~40m	Φ353X560(H)	1000W
ZY8507A/B-L50-90°		50	6010	2.9	0. 65	5~8m	Φ353X248(H)	100W
ZY8507A/B-L100-90°		100	12020	3.5			Φ353X274(H)	250W
ZY8507A/B-L150-90°		150	18030	4		8~15m	Φ353X306(H)	400W
ZY8507A/B-L200-90°		200	25440	4.1	1.4		Φ353X355(H)	400W~600W
ZY8507A/B-L250-90°		250	31600	5.6		15~20m	Φ353X385(H)	600W
ZY8507A-L300-90°		300	37900	7.2	1.4	15~20m	Φ353X500(H)	600W~1000W
ZY8507A-L400-90°		400	50600	9		20~40m	Φ353X560(H)	1000W

Installation and Selection

Ring mounted

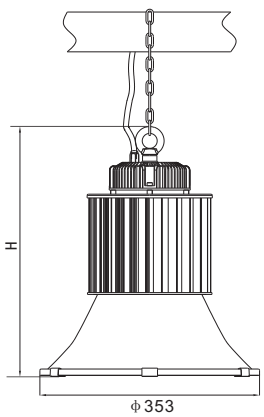

Pole mounted

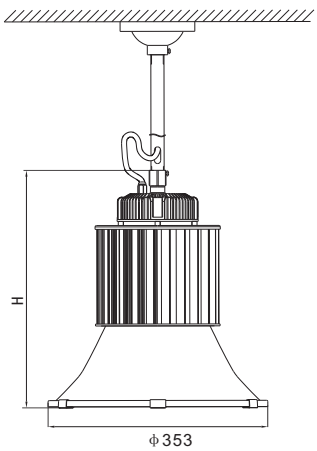

50W~250W

Ring mounted

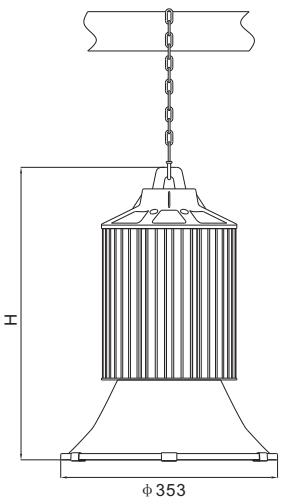

300W, 400W