ZY8109C LED Floodlight

TORMIN



IP 66 | Ta 50 | Ta -40

Application

This product is widely used in outdoor squares and other open-air places lighting, and is also suitable for non-corrosive production workshops as supplementary lighting.

Light Distribution Curve

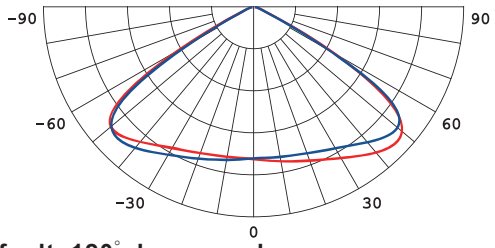

Default: 120° beam angle

Characteristics

- World class, approbated quality components (LEDs /Driver /etc.)
- Equipped with vent to avoid internal fogging and frosting
- Wide choice of optics to suit more applications (asymmetrical and symmetrical)
- Buckle design makes it very easy for further maintenance

Main Specification

Item	Technical Parameter
Input voltage range	90~264VAC
Rated frequency	50Hz / 60Hz
Rated wattage	30W~400W
Light source	LED
Body Material	High pressure die-cast aluminum
Cover Material	Tempered glass
Light source	LED
CRI	70
CCT	5000K
Light source lifetime	100,000hrs
Beam angle	25°, 60°, 90°, 120° or Asymmetrical

Ordering Reference

Version S: Dimensions: 345(L)×226(W)×81(H); Net weight: 2.3 Kgs

Model No.	ZY8109C-L30S	ZY8109C-L40S	ZY8109C-L50S
Rated Wattage	30W	40W	30W
Efficiency	135lm/w	145lm/w	135lm/w
Lumen	4050lm	5800lm	6750lm

Version M: Dimensions: 447(L)×321(W)×90(H); Net weight: 4.4 Kgs

Model No.	ZY8109C-L60M	ZY8109C-L80M	ZY8109C-L100M	ZY8109C-L120M
Rated Wattage	60W	80W	100W	120W
Efficiency	145lm/w	140lm/w	140lm/w	140lm/w
Lumen	8700lm	11200lm	14000lm	16800lm

TORMIN ZY8109C LED Floodlight

Version L: Dimensions: 495(L)×378(W)×90(H); Net weight: 6.0 Kgs

Model No.	ZY8109C-L150L	ZY8109C-L180L	ZY8109C-L200L	ZY8109C-L240L
Rated Wattage	150W	180W	200W	240W
Efficiency	140lm/w	145lm/w	140lm/w	135lm/w
Lumen	21000lm	26100lm	28000lm	32400lm

Version XL: Dimensions: 639(L)×507(W)×90(H); Net weight: 12.0 Kgs

Model No.	ZY8109C-L320XL	ZY8109C-L400XL
Rated Wattage	320W	400W
Efficiency	150lm/w	145lm/w
Lumen	48000lm	58000lm

*Above values are calculated based on the product with CCT over 3000K, values of 3000K are 5% lower than above values.
*Luminous efficacy of asymmetrical is 5% lower than other light distributions.
*Values shown are subject to ±5% tolerance.

Dimensions in mm

Version S

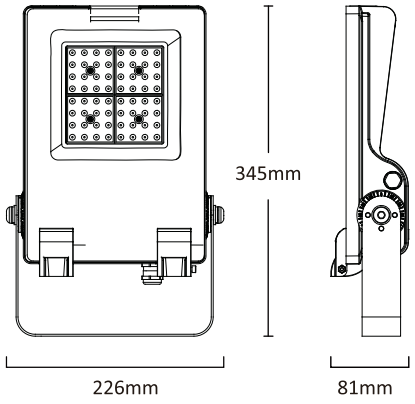

Version M

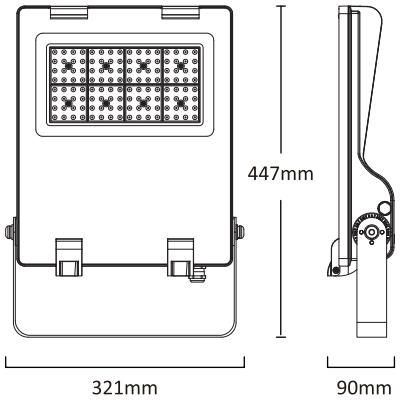

Version L

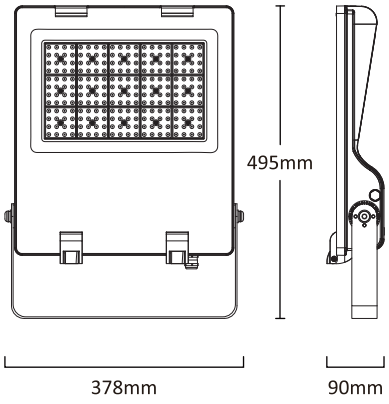

Version XL

