DGS20/127L[C] DGS30/127L[C] DGS45/127L[C] LED Explosion-proof Mining Tunnel Light



Ex marking: Ex d I Mb

Application

- Idea to be used in underground tunnel, chamber, substations, pump room, parking lot in the mining filed.
- Approved for safe use in mining field with methane, grime and other hazardous explosive mixtures.

Characteristics

- It is made using a special aluminum housing, all exposed fasteners adopt 304 stainless steel. Using high-tech anti-corrosion surface treatment technology, suitable for long-term highly corrosive environment under coal mine.
- A full range of high conductivity material accelerate convection cooling structure, effective guarantee long-term use in high temperature environments.
- Optoelectronic integrated technology no dark spot, no ghosting, the average light efficiency of whole lamp can reach to 100 lm/W, energy-saving is 60% more than Metal Halide Lamp.
- Universal AC-DC, power factor above 0.98.
- Quick replay light source without welding.
- Independent wiring chamber, safe and easy installation and maintenance.
- Designed for Roadway Layout with ring mounted which can be connected in parallel.

Light Distribution Curve

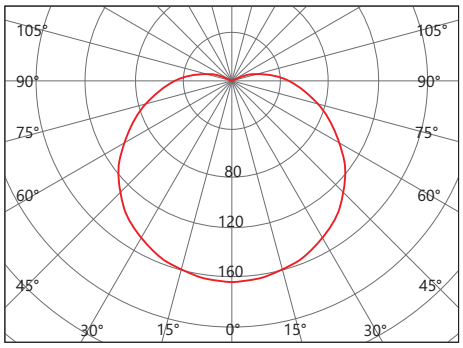

cd/1000lm



Main Specification

Item	Technical Parameters
Input voltage (V)	90-264VAC
Rated frequency	50Hz / 60Hz
Light source	LED
Life time (h)	50,000
CRI (Ra)	70 (80 optional)
CCT	5000K(3000K/4000K optional)
Cable entry	G3/4"
Leading-in cable diameter	Φ9mm~ Φ14mm
Dimension (mm)	Φ230×218(Ring Mounting)
	218×230×268(Bracket)
Net weight (kg)	2.7(Ring Mounting)
	3.2(Bracket)

DGS20/127L[C] DGS30/127L[C] DGS45/127L[C] LED Explosion-proof Mining Tunnel Light

Ordering Reference

Ordering reference	Picture	Rated wattage (W)	Light output (lm)	Mounting Type	Space height ratio	Mounting height (m)	Equivalent to MH
DGS20/127L(C)-P		20W	1800	Ring	1.75	2~6m	50W
DGS30/127L(C)-P		30W	2600				70W
DGS45/127L(C)-P		45W	3400				100W
DGS20/127L(C)-S		20W	1800	Bracket		2~6m	50W
DGS30/127L(C)-S		30W	2600				70W
DGS45/127L(C)-S		45W	3400				100W

Drawing of dimension (Dimensions in mm)

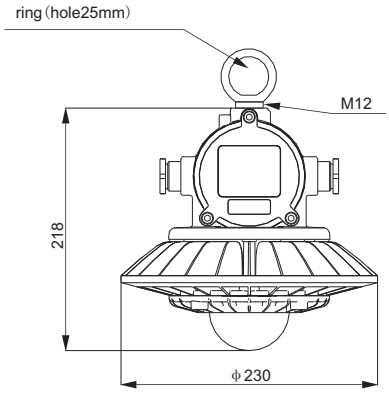

Ring Mounting (Standard)

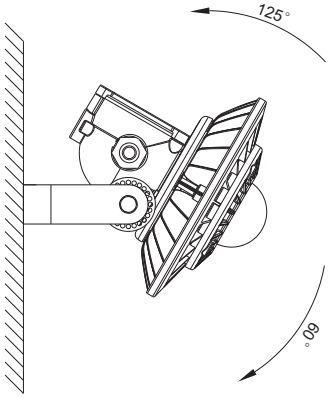

Wall Mounting (bracket)