TORMIN TM-ZFZD-E6W-BC5200 Explosion proof Fire Emergency Light

Ex

IP 66

Ta 40

Ta -40



Ex mark: Ex d IIC T6 Gb
Ex tD A21 IP66 T85℃
Executive standard: GB/T 3836 GB17945

Application

Emergency lighting for hazardous locations
Hazardous gas zone 1 and zone 2



Installation dimension drawing

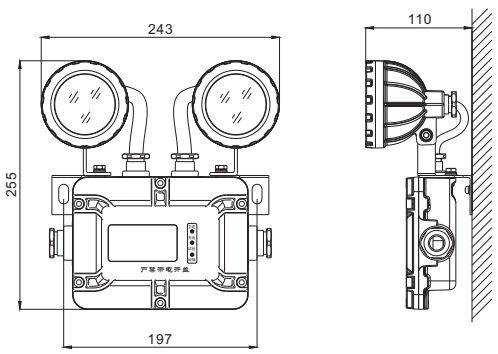

Application

- This product is widely used in emergency lighting in hazardous areas;
- Applicable to places with high moisture and corrosion protection level;
  Applicable to explosive gas or dust environment Zone 1, Zone 2 or Zone 21, Zone 22;
- Applicable to IIA, IIB, IIC and IIIA, IIIB, IIC combustible environments;
- Applicable to temperature groups T1~T6.

Characteristics

- This product has an aluminum alloy shell, electrostatic spraying on the surface, beautiful appearance, and high waterproof, dustproof and anti-corrosion functions;
- The lamp has a force start function and can be controlled locally or centrally.
- The transparent cover and the shell are treated with an adhesive structure, which can be used in harsh working conditions indoors and outdoors for a long time, with a protection level of IP66;
- The cable is introduced into the wiring cavity through the outer diameter of the cable and connected to the wiring terminal. There are grounding screws inside and outside the shell. Users should reliably ground when using this product;
- It has a monthly inspection function, which automatically discharges once a month, and the emergency working state is maintained for 120s, and the main power state is automatically restored;
- It has an annual inspection function, which automatically switches from the main power to the emergency working state every other year and continues until the discharge ends, and then automatically restores the main power state.

Main Specification

Item	Technical parameter
Rated voltage	AC 220V
Rated Fre.	50Hz
Emergency wattage	2×3W
Emergency time	≥90min
Light source	LED
Cable entry	G3/4"
Leading-in cable diameter	ϕ9mm~ϕ12mm
Dimension	255mm×243mm×110mm
Net weight	2.9Kg