

Characteristics

- Housing made of special aluminum processing, hardware and brackets adopt 304 stainless steel, using high-tech anti-corrosion surface treatment technology, can be long-term suitable for seaside, chlor-alkali, hydrogen sulfide and other highly corrosive areas.
- Superconducting aluminum comprehensive self-loop thermal design, long-term suitable for operating environment with high temperature and high humidity. Upper and lower ventilation fin structure, no dust.
- Variety of light distribution, variety of installation types, same shape, an effective solution to beautify workshop and device platform.
- It adopts Imported light source, no dark zone in light spot, no ghosting, the entire lighting efficiency average up to 120lm / W, can save 60% or more on energy than the metal halide lamp.
- AC and DC wide voltage constant power supply, can long-term use in voltage instability places.
- It can quickly replace the light source without welding.
- Trunnion openings connecting device, can achieve single installation and maintenance work.
- Frontal area is only 30% of the traditional light fixture, suitable for high altitude and strong wind area.

Application

Suitable to port transport corridors, oxidation plant and other wet corrosive environments.



Main Specification

Item	Technical Parameters
Input voltage (V)	90~264VAC(30~60W) or 185~264VAC(80W)
	18~43VAC/ 18~55VDC(25~60W)
Rated frequency	50Hz / 60Hz
Light Source	LED
Life time (h)	50,000
CRI	Ra 70(80 optional)
CCT	5000K(3000K/4000K optional)
Leading-in cable diameter	Φ8mm~ Φ14mm
Dimension (mm)	Φ230×170
Net weight (kg)	3

Ordering Reference

Model number	Picture	Rated wattage (W)	Light output (lm)	Space height ratio	Mounting height (m)	Light distribution Curve(1000cd/lm)	Equivalent to MH
Input voltage: 90~264VAC(30~60W) or 185~264VAC(80W)							
ZY8607S-L30-60° ×80°		30W	3500	1.25	3~6m	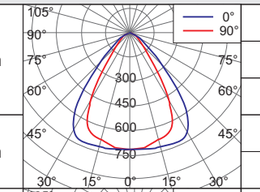	70W
ZY8607S-L40-60° ×80°		40W	4600				100W
ZY8607S-L50-60° ×80°		50W	5600				100W
ZY8607S-L60-60° ×80°		60W	6900		5~8m		150W
ZY8607S-L80-60° ×80°		80W	8800				175W
ZY8607S-L30-90° ×110°		30W	3300	1.75	3~6m	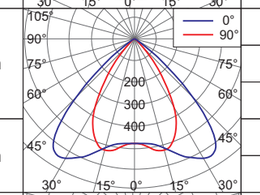	70W
ZY8607S-L40-90° ×110°		40W	4400				100W
ZY8607S-L50-90° ×110°		50W	5600				100W
ZY8607S-L60-90° ×110°		60W	6700		5~8m		150W
ZY8607S-L80-90° ×110°		80W	8400				175W
ZY8607S-L30-200°		30W	2800	1.75	2~5m	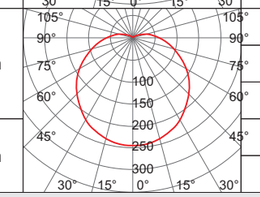	70W
ZY8607S-L40-200°		40W	3700				100W
ZY8607S-L50-200°		50W	4500				100W
ZY8607S-L60-200°		60W	5400		3~6m		150W
ZY8607S-L80-200°		80W	6800				175W
Input voltage: 18~43VAC/ 18~55VDC							
ZY8607S-L25D-60° ×80°		25W	2900	1.25	3~6m	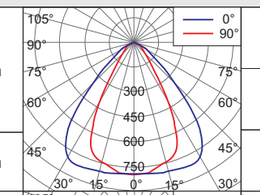	70W
ZY8607S-L40D-60° ×80°		40W	4600				100W
ZY8607S-L60D-60° ×80°		60W	6900		5~8m		150W
ZY8607S-L25D-90° ×110°		25W	2700	1.75	3~6m	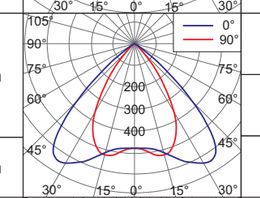	70W
ZY8607S-L40D-90° ×110°		40W	4400				100W
ZY8607S-L60D-90° ×110°		60W	6700		5~8m		150W
ZY8607S-L25D-200°		25W	2400	1.75	2~5m	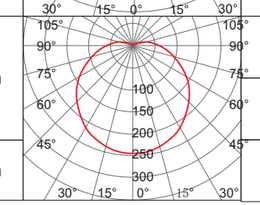	70W
ZY8607S-L40D-200°		40W	3700				100W
ZY8607S-L60D-200°		60W	5400		3~6m		150W

Drawing of dimension (Dimensions in mm)

Seat mounting

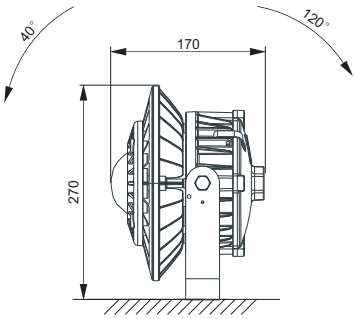

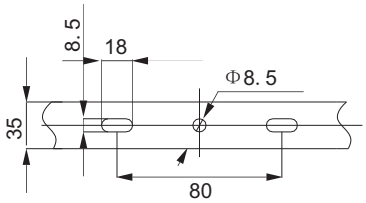

Ceiling mounting

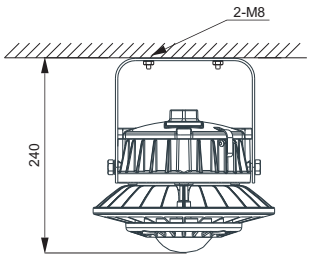

Side wall mounting

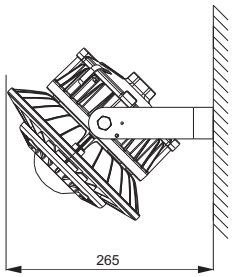

Pole mounting

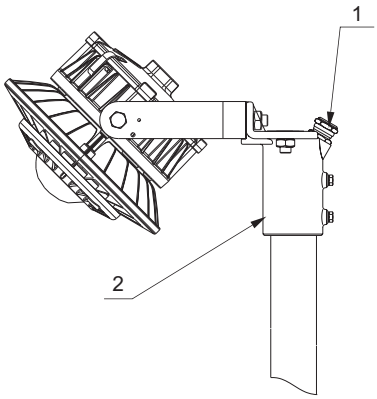

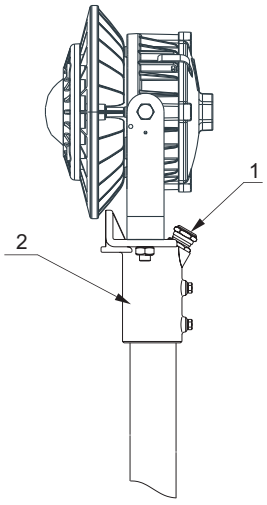

Order number	No.	Specification	Quantity	note
P07	1	Water proof connector M20	1	Suitable for Φ8mm-Φ12mm cable
	2	Pole mounting bracket	1	Suitable for DN32 , DN40 pole