ZY8606P Series Led Light (Ring)

TORMIN

ABS

CE

LM79

LM84

IP 66

Ta 55

Ta -40

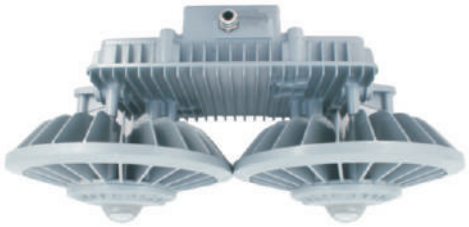

Characteristics

- Super power, maximum power up to 480W, can replace more than 1000W metal halide lamps and sodium lamps.
- Housing made of special aluminum processing, hardware and brackets adopt 304 stainless steel, using high-tech anti-corrosion surface treatment technology, can be long-term suitable for seaside, chlor-alkali, hydrogen sulfide and other highly corrosive areas.
- Superconducting aluminum comprehensive self-loop thermal design, long-term suitable for operating environment with high temperature and high humidity. Upper and lower ventilation fin structure, no dust.
- Variety of light distribution, variety of installation types, same shape, an effective solution to beautify workshop and device platform.
- It adopts Imported light source, no dark zone in light spot, no ghosting, can save 60% or more on energy than the metal halide lamp.
  AC and DC wide voltage constant power supply, power factor above 0.98.
- It can quickly replace the light source without welding.
- Independent wiring chamber, safe and convenient for installation and maintenance.
- According to user needs, can choose light fixtures with a variety of intelligent control.

Application

Suitable for plant lighting to high and medium installation height with high temperature performance for demanding.
Suitable for plant lighting to wet and corrosive environments.



Main Specification

Item	Technical Parameters
Input voltage (V)	90~305VAC
Rated frequency	50Hz / 60Hz
Light source	LED
Life time (h)	50,000
CRI	Ra 70 (80 optional)
CCT	5000K(3000K/4000K optional)
Leading-in cable diameter	Φ8mm~ Φ12mm
Dimension (mm)	602×300×250
Net weight (kg)	11.2

Ordering Reference

Model number	Picture	Rated Wattage (W)	Light output (lm)	Space height ratio	Mounting height (m)	Light distribution Curve(1000cd/lm)	Equivalent to MH
ZY8606P-L300-18°		300W	28800	0.4	25-45m	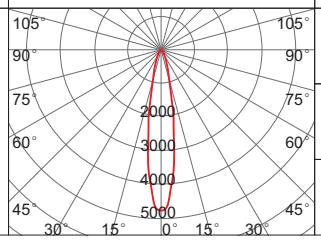	600W
ZY8606P-L400-25°		400W	40600				1000W
ZY8606P-L480-25°		480W	47400				＞1000W

ZY8606P Series LED Lights (Ring)

Ordering Reference

Model number	Picture	Rated wattage (W)	Light output (lm)	Space height ratio	Mounting height (m)	Light distribution Curve(1000cd/lm)	Equivalent to MH
ZY8606P-L240-40°	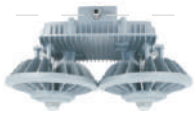	240W	25800	0.7	15-30m	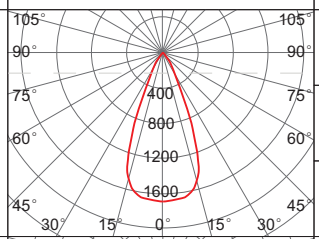	600W
ZY8606P-L300-40°		300W	32800				1000W
ZY8606P-L360-40°		360W	37800				＞1000W
ZY8606P-L240-60°		240W	25500	0.9	15~30m	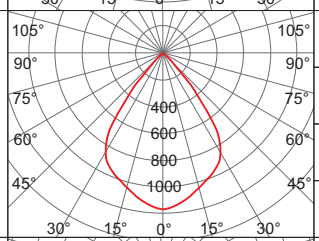	600W
ZY8606P-L300-60°		300W	32400				1000W
ZY8606P-L400-60°		400W	45200				＞1000W
ZY8606P-L480-60°		480W	55300				/
ZY8606P-L240-80°		240W	26000	1.35	15~30m	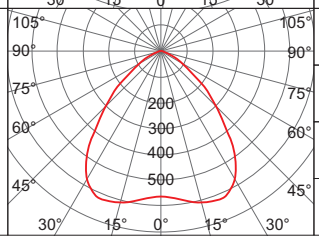	600W
ZY8606P-L300-80°		300W	33100				1000W
ZY8606P-L400-80°		400W	46200				＞1000W
ZY8606P-L480-80°		480W	56500				/

Drawing of dimension (Dimensions in mm)

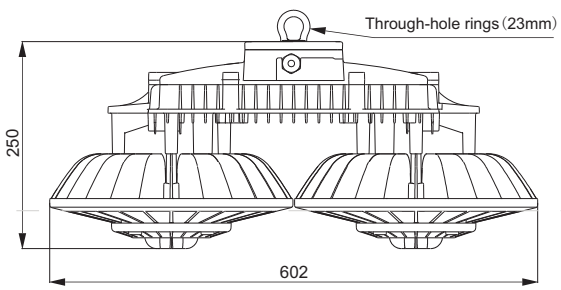

Ring mounting (Standard)

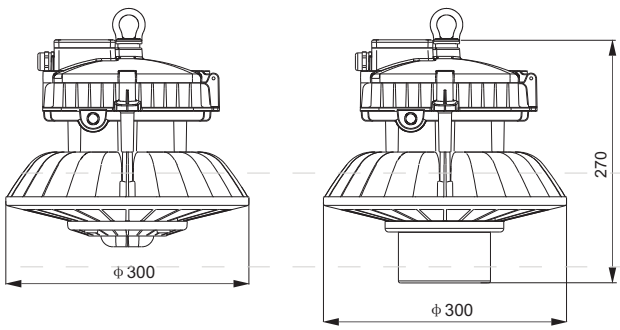

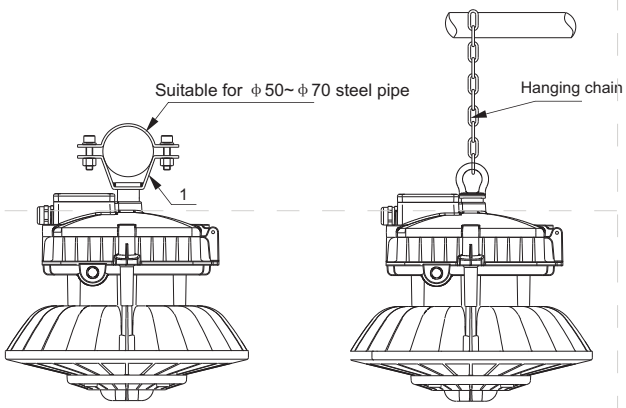

Hold hoop mounting **Hanging chain mounting**

Accessories Ordering Information (optional)

Order number	No.	Specifications Model	Quantity	Remark
P14	1	Hold hoop bracket	1	Suitable for ϕ50~ϕ70 steel pipe