ZY8610 Series LED Floodlight

IP 66

Ta 45

Ta -40



Characteristics

■ The product's unique back transparent module cooling system improves the light efficiency of the light source and ensures the LED's life of 100,000 hours.

■ Modular design, according to the brightness requirements of the lighting site, the number of corresponding modules can be flexibly selected.

■ Modular design can solve the difficult maintenance problem of traditional LED lamps. Module replacement can be realized without opening the lamps.

■ The light source adopts the world-famous brand, and the power consumption is only 40% of the metal halide lamp.

■ The color temperature can be selected from 2700K to 6000K according to customer requirements. The normal factory color temperature is 5000K.

■ Adopt international brands, power factor up to 0.98, multiple protections, stability, and life expectancy rank first in the industry.

■ The angle locking device of the lamp can ensure that the lamp will never change the illumination angle under the vibration environment.

■ The shell adopts high-tech surface spraying technology, wear-resistant, corrosion-resistant, waterproof and dustproof, suitable for various harsh environments.

Application

This product is widely used in airports, storage yards, squares, turntables, stadiums and other places;

Main Specification

Item	Technical Parameters
Input voltage (V)	90~305VAC
Rated frequency	50Hz / 60Hz
Rated wattage	500W~1500W
Light source	LED
Life time of light source	100,000hrs
CRI	Ra 70 (80 customized)
CCT	5000K (3000K/ 4000K customized）

Ordering Reference

Model number	Rated wattage(W)	Light output (lm)	Net weight (Kgs)	Dimensions (mm)
ZY8610-L500	500W	>67,500	13.8	625×395×175
ZY8610-L750	750W	>101,250	17.2	625×535×175
ZY8610-L1000	1000W	>135,000	22	625×625×175
ZY8610-L1250	1250W	>168,750	26.7	625×815×175
ZY8610-L1500	1500W	>202,500	31.3	625×955×175

Installation and selection

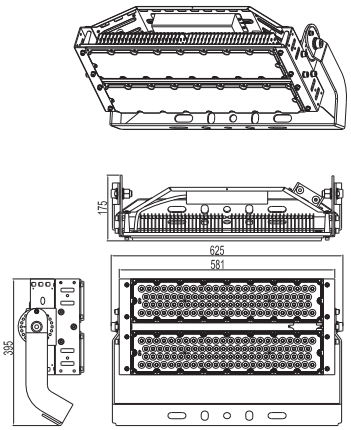

500W

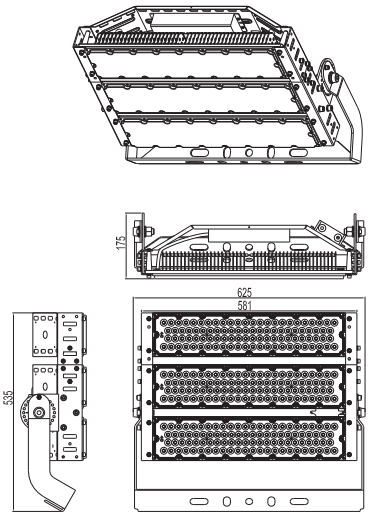

750W

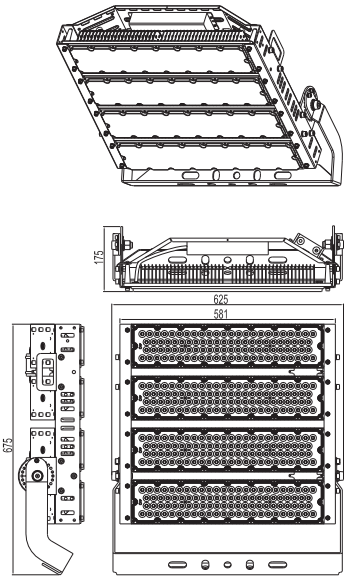

1000W

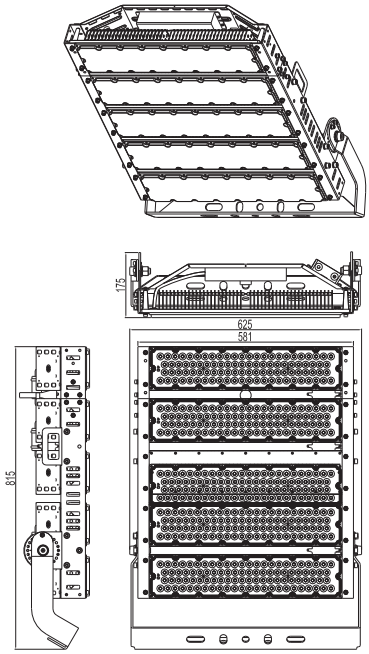

1250W

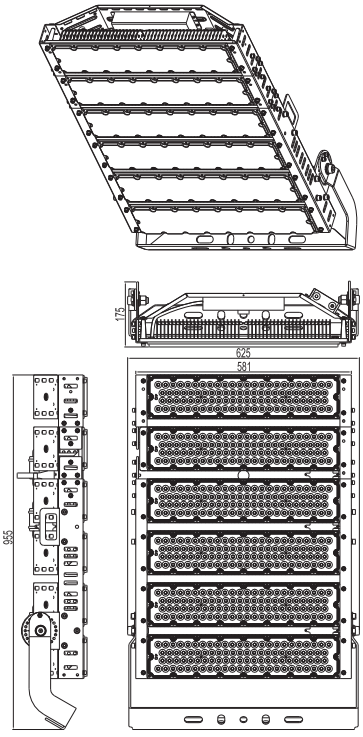

1500W