TORMIN

BC9302P Series
LED Explosion Proof FloodLight



Beam angle:80°

Ex marking: Ex db op is IIC T5/T6 Gb
Ex tb op is IIIC T95℃/T80℃ Db

Characteristics

- Large light surface flexible light output, no glare, no blue light hazard, especially suitable for long-term lighting in a working environment.
- The translucent cover is made of non-transparent tempered glass, which is extremely resistant to weathering and acid and alkali.
- The shell is made of aluminum alloy, the standard part is made of 304 stainless steel, and the surface is made of high-tech anti-corrosion treatment technology, which is suitable for various harsh industrial environments.
- The luminaire has two access ports, which can be used in parallel as a connection, saving the cost of installing the junction box in the middle.
- The lamp opening and closing connection design enable single person installation and maintenance, saving labor costs.
- American Lumileds light source, the overall lighting efficiency is as high as 100lm / W, compared with the metal halide lamp energy saving more than 60%.
- The whole lamp protection grade is IP66, which can be applied to various indoor and outdoor sand dust or rain fog and sea wave environment for a long time.

Application

Equipment platform, equipment layer area, main and auxiliary workshop, channel, pipeline, joint station, transfer station, pump valve shed, tank, material sample, plank road, warehouse room, warehouse and other places.
Hazardous Gas Zone 1 and Zone 2
Dangerous dust Zone 21 and Zone 22



Main Specification

Rated voltage (V)	100~240VAC/120~270VAC
	20-38VAC/ 20~48VDC
Rated frequency	50Hz / 60Hz
Light source	LED
Life time(h)	50,000h
CCT	5000K(3000K/4000K optional)
Screw thread	G3/4, M20, M25, NPT3/4", NPT1/2
Leading-in cable diameter	ϕ9mm~ ϕ14mm
Dimension (mm)	ϕ240×220
Net weight (kg)	5

Ordering reference

Ordering reference	Picture	Rated wattage (W)	Light output (lm)	Space height ratio	Mounting height(m)	Light distribution curve (1000cd/lm)	Replace to Metal halide lamp
BC9302P-L30-80°		30W	>3300	1.25	2~5m	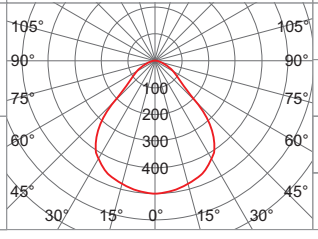	70W
BC9302P-L40-80°		40W	>4400				100W
BC9302P-L50-80°		50W	>5500		4~6m		100W
BC9302P-L60-80°		60W	>6600				150W

*The lamp can be matched with a milk white sphere lens: 200°

Drawing of dimension (Dimensions in mm)

Side wall mounting 150°/90°

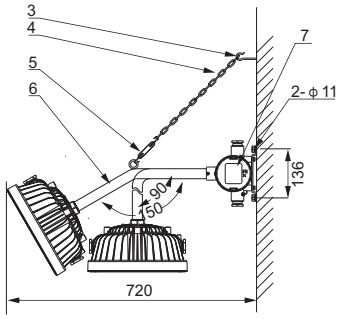

Pole mounting

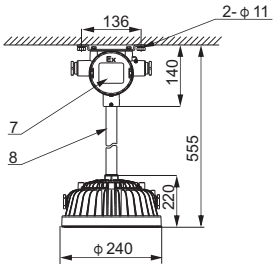

Ceiling mounting

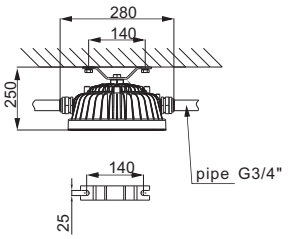

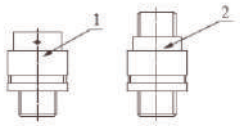

Explosion proof connector
G3/4" Female- Male

Explosion proof connector
G3/4" Male- Male

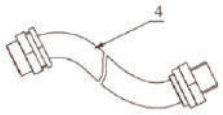

Connecting pipe
G3/4" Female- Male

Fence Mounting

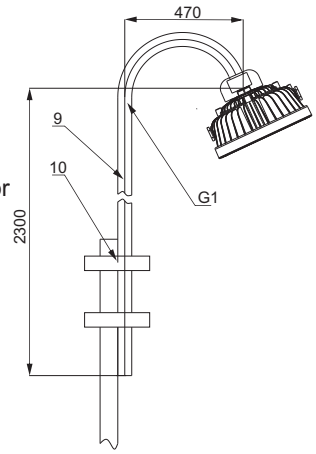

Flanged Mounting

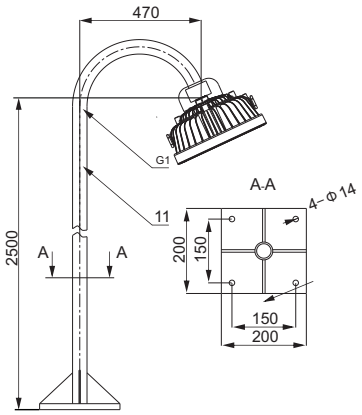

Number	Model specifications	Quantity	Note	Number	Model specifications	Quantity	Note
1	Explosion proof connector	Reference mounting image	G3/4" Female- Male	7	Explosion proof junction box	1	
2	Explosion proof connector	Reference mounting image	G3/4" Male- Male	8	G3/4" pole	1	The length in accordance with the request of the customer
3	Expansion screw hook	1		9	Fence type lighting pole	1	
4	Chain	1	G3/4"	10	U-bolts	2	
5	C-C screw buckle	1	G3/4" Female- Male	11	Flange type lighting pole	1	
6	G3/4" bend pipe	1	90 degrees and 150 degrees are optional	12			

TORMIN

BC9302S Series
LED Explosion Proof FloodLight



Beam angle:80°

Ex marking: Ex db op is IIC T5/T6 Gb
Ex tb op is IIIC T95℃/T80℃ Db

Characteristics

- Large light surface flexible light output, no glare, no blue light hazard, especially suitable for long-term lighting in a working environment.
- The translucent cover is made of non-transparent tempered glass, which is extremely resistant to weathering and acid and alkali.
- The shell is made of aluminum alloy, the standard part is made of 304 stainless steel, and the surface is made of high-tech anti-corrosion treatment technology, which is suitable for various harsh industrial environments.
- The luminaire has two access ports, which can be used in parallel as a connection, saving the cost of installing the junction box in the middle.
- The lamp opening and closing connection design enable single person installation and maintenance, saving labor costs.
- American Lumileds light source, the overall lighting efficiency is as high as 100lm / W, compared with the metal halide lamp energy saving more than 60%.
- The whole lamp protection grade is IP66, which can be applied to various indoor and outdoor sand dust or rain fog and sea wave environment for a long time.

Application

Equipment platform, equipment layer area, main and auxiliary workshop, channel, pipeline, joint station, transfer station, pump valve shed, tank, material sample, plank road, warehouse room, warehouse and other places.
Hazardous Gas Zone 1 and Zone 2
Dangerous dust Zone 21 and Zone 22



Main Specification

Rated voltage (V)	100~240VAC/120~270VAC
	20-38VAC/ 20~48VDC
Rated frequency	50Hz / 60Hz
Light source	LED
Life time(h)	50,000h
CCT	5000K(3000K/4000K optional)
Screw thread	G3/4, M20, M25, NPT3/4", NPT1/2
Leading-in cable diameter	ϕ 9mm~ ϕ 14mm
Dimension (mm)	ϕ 240×220
Net weight (kg)	5

Ordering reference

Ordering reference	Picture	Rated wattage (W)	Light output (lm)	Space height ratio	Mounting height(m)	Light distribution curve (1000cd/lm)	Replace to Metal halide lamp
BC9302S-L30-80°		30W	>3300	1.25	2~5m	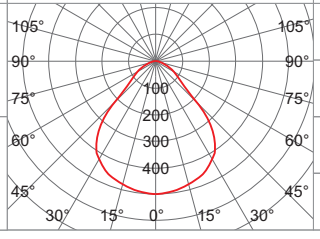	70W
BC9302S-L40-80°		40W	>4400				100W
BC9302S-L50-80°		50W	>5500		4~6m		100W
BC9302S-L60-80°		60W	>6600				150W

*The lamp can be matched with a milk white sphere lens: 200°

Drawing of dimension (Dimensions in mm)

Seat mounting

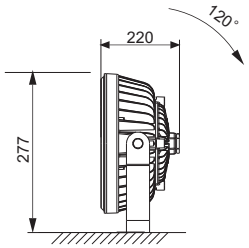

Side Wall mounting

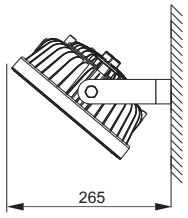

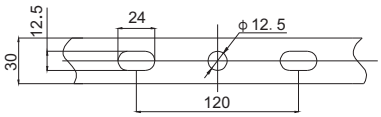

Installation size

TORMIN

BC9302P Series
LED Explosion Proof FloodLight



Beam angle:200°

Ex marking: Ex db op is IIC T5/T6 Gb
Ex tb op is IIIC T95℃/T80℃ Db

Characteristics

- Large light surface flexible light output, no glare, no blue light hazard, especially suitable for long-term lighting in a working environment.
- The translucent cover is made of non-transparent tempered glass, which is extremely resistant to weathering and acid and alkali.
- The shell is made of aluminum alloy, the standard part is made of 304 stainless steel, and the surface is made of high-tech anti-corrosion treatment technology, which is suitable for various harsh industrial environments.
- The luminaire has two access ports, which can be used in parallel as a connection, saving the cost of installing the junction box in the middle.
- The lamp opening and closing connection design enable single person installation and maintenance, saving labor costs.
- American Lumileds light source, the overall lighting efficiency is as high as 100lm / W, compared with the metal halide lamp energy saving more than 60%.
- The whole lamp protection grade is IP66, which can be applied to various indoor and outdoor sand dust or rain fog and sea wave environment for a long time.

Application

Equipment platform, equipment layer area, main and auxiliary workshop, channel, pipeline, joint station, transfer station, pump valve shed, tank, material sample, plank road, warehouse room, warehouse and other places.
Hazardous Gas Zone 1 and Zone 2
Dangerous dust Zone 21 and Zone 22



Main Specification

Rated voltage (V)	100~240VAC/120~270VAC(30~60W)
	20~38VAC/20~48VDC(30~60W)
Rated frequency	50Hz / 60Hz
Light source	LED
Life time(h)	50,000h
CCT	5000K(3000K/4000K optional)
Screw thread	G3/4, M20, M25, NPT3/4", NPT1/2
Leading-in cable diameter	ϕ9mm~ϕ14mm
Dimension (mm)	ϕ240×220
Net weight (kg)	5

Ordering reference

Ordering reference	Picture	Rated wattage (W)	Light output (lm)	Space height ratio	Mounting height(m)	Light distribution curve (1000cd/lm)	Replace to Metal halide lamp
BC9302P-L30-200°		30W	2700	1.75	2~5m	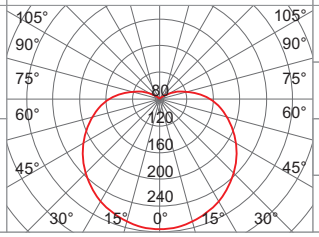	70W
BC9302P-L40-200°		40W	3600				100W
BC9302P-L50-200°		50W	4500		3~6m		100W
BC9302P-L60-200°		60W	5600				150W

*The lamp can be matched with a flat lens: 80°

Drawing of dimension (Dimensions in mm)

Wall mounting 150°

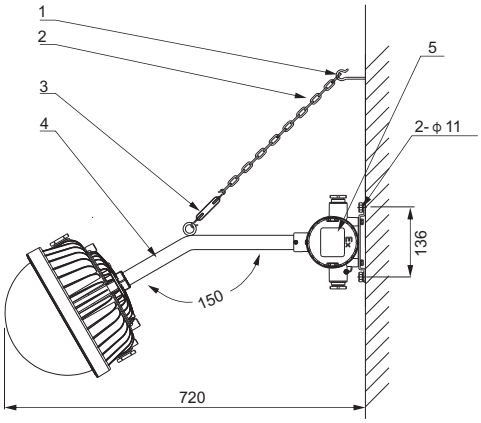

Wall mounting 90°

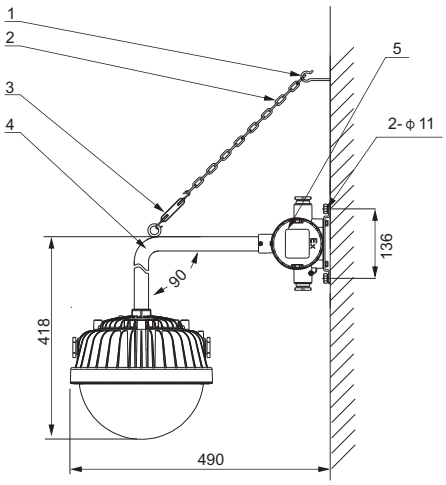

Accessories list (optional)

Ordering reference	Item No.	Specification	Qty
P04	1	Expansion screw hook	1
	2	Chain	1
	3	C-C Spiral buckle	1
	4	90° pole with G3/4"	1
BHD01	5	Explosion proof junction box	1

Accessories list (optional)

Ordering reference	Item No.	Specification	Qty
P03	1	Expansion screw hook	1
	2	Chain	1
	3	C-C Spiral buckle	1
	4	150° pole with G3/4"	1
BHD01	5	Explosion proof junction box	1

Pole mounting

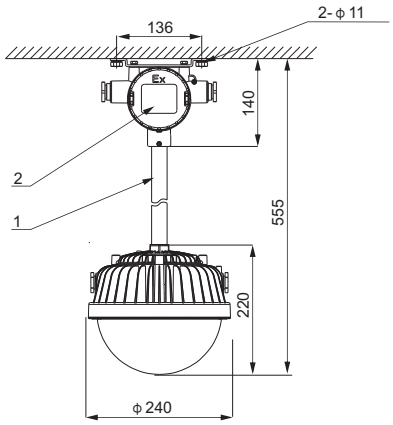

Ceiling mounting

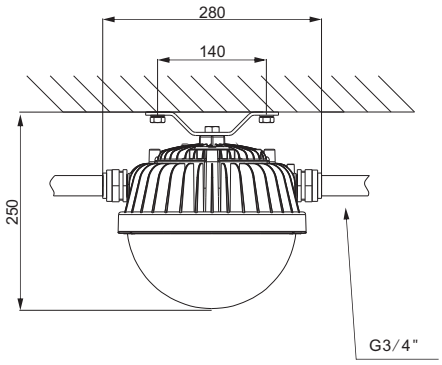

Accessories list (optional)

Ordering reference	Item No.	Specification	Qty
P01	1	30cm Pole (G3/4")	1
BHD01	2	Explosion proof junction box	1

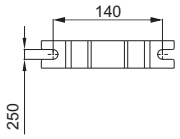

Flange mounting

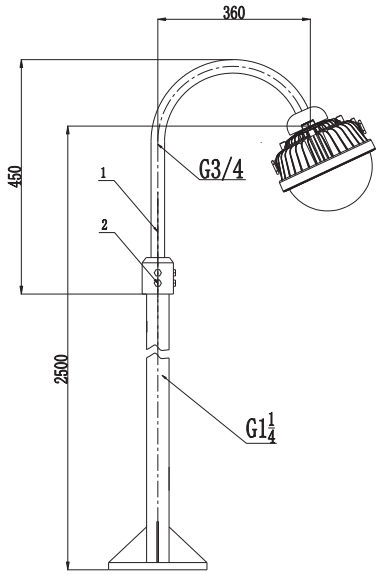

Guardrail mounting

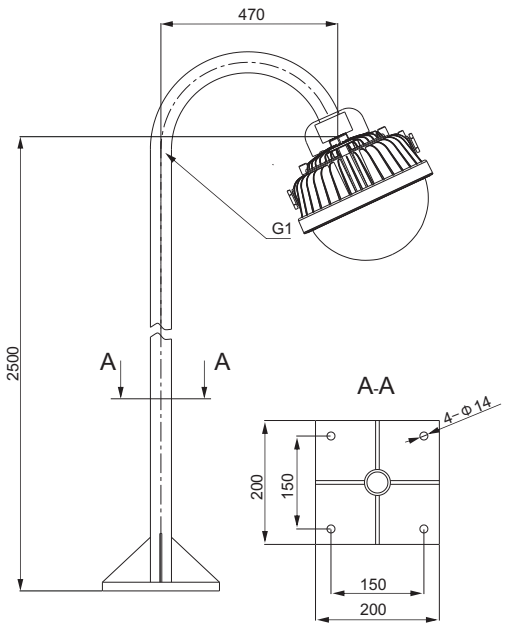

Accessories list (optional)

Ordering reference	Item No.	Specification	Qty
P05	1	Guardrail light pole	1
	2	Locking screw	4

Accessories list (optional)

Ordering reference	Item No.	Specification	Qty
P06	1	Flange light pole	1

TORMIN

BC9302S Series
LED Explosion Proof FloodLight



Beam angle:200°

Ex marking: Ex db op is IIC T5/T6 Gb
Ex tb op is IIIC T95℃/T80℃ Db

Characteristics

- Large light surface flexible light output, no glare, no blue light hazard, especially suitable for long-term lighting in a working environment.
- The translucent cover is made of non-transparent tempered glass, which is extremely resistant to weathering and acid and alkali.
- The shell is made of aluminum alloy, the standard part is made of 304 stainless steel, and the surface is made of high-tech anti-corrosion treatment technology, which is suitable for various harsh industrial environments.
- The luminaire has two access ports, which can be used in parallel as a connection, saving the cost of installing the junction box in the middle.
- The lamp opening and closing connection design enable single person installation and maintenance, saving labor costs.
- American Lumileds light source, the overall lighting efficiency is as high as 100lm / W, compared with the metal halide lamp energy saving more than 60%.
- The whole lamp protection grade is IP66, which can be applied to various indoor and outdoor sand dust or rain fog and sea wave environment for a long time.

Application

Equipment platform, equipment layer area, main and auxiliary workshop, channel, pipeline, joint station, transfer station, pump valve shed, tank, material sample, plank road, warehouse room, warehouse and other places.
Hazardous Gas Zone 1 and Zone 2
Dangerous dust Zone 21 and Zone 22



Main Specification

Rated voltage (V)	100~240VAC/120~270VAC(30~60W)
	20~38VAC/20~48VDC(30~60W)
Rated frequency	50Hz / 60Hz
Light source	LED
Life time(h)	50,000h
CCT	5000K(3000K/4000K optional)
Screw thread	G3/4, M20, M25, NPT3/4", NPT1/2
Leading-in cable diameter	ϕ9mm~ϕ14mm
Dimension (mm)	ϕ240×220
Net weight (kg)	5

Ordering reference

Ordering reference	Picture	Rated wattage (W)	Light output (lm)	Space height ratio	Mounting height(m)	Light distribution curve (1000cd/lm)	Replace to Metal halide lamp
BC9302S-L30-200°		30W	2700	1.75	2~5m	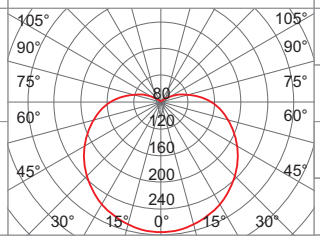	70W
BC9302S-L40-200°		40W	3600				100W
BC9302S-L50-200°		50W	4500		3~6m		**100W**
BC9302S-L60-200°		60W	5600				150W

*The lamp can be matched with a flat lens: 80°

Drawing of dimension (Dimensions in mm)

Seat mounting

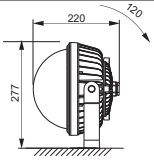

Side wall mounting

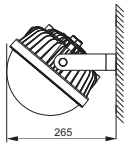

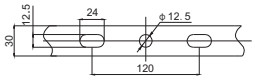

Installation size