ZY8101 Series
Glare Free Led Floodlight

CE
RoHS
IP 66
Ta 50
Ta -40



Application

It is an ideal lighting solution for power plants, substations, factories, docks, metallurgical plants and other indoor and outdoor lighting.

Characteristics

- Apply the design of lens with different angles, make irradiation surface wider, fully effective use of light. Illumination uniformity, no glare, does not cause eyestrain of workers, improve work efficiency.
- Radiator adopt fin structure design, light source adopt decentralized layout and separate structure of power, long-term suitable for operating environment with high temperature and high humidity.
- It adopts American CREE LED as light source, no dark zone in light spot, can save 60% or more on energy than the metal halide lamp.
- Equipped with electrical appliance of Meanwell or similar quality power driver AC- DC wide voltage constant power supply, power factor up to 0.98.
- The locking device on the bracket will keep the lamp from shift or trembling during harsh vibration.
- Housing made of aluminum alloy, all exposed fasteners adopt 304 stainless steel., using high-tech anti-corrosion surface treatment technology, suitable for a variety of harsh industrial operating environment.
- According to user needs, achieve a variety of intelligent control.

Light Distribution Curve

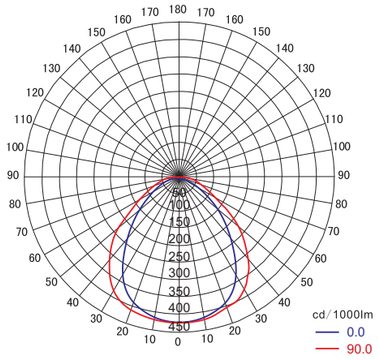

Main Specification

Item	Technical Parameters
Input voltage (V)	90~264VAC(30~80W)
	18~43VAC/ 18~55VDC(25~60W)
Rated frequency	50Hz / 60Hz
Light source	LED
Life time (h)	100,000
CRI	Ra 75
CCT	5000K ±250K
Leading-in cable diameter	Φ6mm~ Φ8mm
Dimension (mm)	300×300×75
Net weight (kg)	4.7

ZY8101 Series
Glare Free Led Floodlight

Ordering Reference

Model number	Input voltage (V)	Rated wattage (W)	Light output (lm)	Space height ratio	Mounting height (m)	Equivalent to Metal Halide Lamp
ZY8101-L25	90~264VAC	25W	2800	1.4	2~6m	70W
ZY8101-L40		40W	3800			100W
ZY8101-L60		60W	5100		3~8m	150W
ZY8101-L80		80W	7200			175W
ZY8101-L25D	18~43VAC/ 18~55VDC	25W	2800	1.4	2~6m	70W
ZY8101-L40D		40W	3800			100W
ZY8101-L60D		60W	5100		3~8m	150W

Drawing of dimension (Dimensions in mm)

Seat mounting

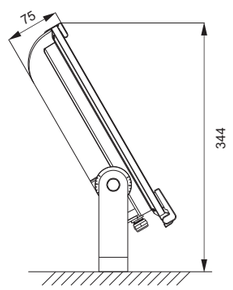

Side wall mounting

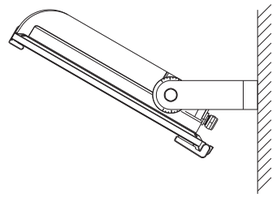

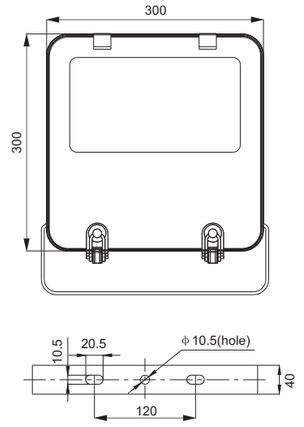

Installation Dimension

