

Application

Suitable for low installation height region in high temperature, high humidity and vibration environment, like offshore platforms, ship transport corridors, passages, etc.



Characteristics

- It is made using a special aluminum housing, anti-corrosion performance better than 304 stainless steel, suitable for long-term highly corrosive environment of offshore platforms, chlor-alkali, vulcanization cyanide.
- A full range of high conductivity material accelerate convection cooling structure, effective guarantee long-term use in high temperature environments.
- Variety of light distribution, variety of installation types, an effective solution to beautify workshop and device platform.
- The shell is made of high-tech surface coating technology, corrosion resistant, waterproof and dust proof, suitable for harsh environments.
- Imported light source, high luminous efficiency 120lm/w, low-light failure Taiwan Meanwell power supply or same quality power supply, power factor above 0.98, high reliability and long time service life.
- Independent wiring chamber, safe and easy installation and maintenance.
- It is available to intelligent control functions(1-10VDC, PWM, Carrier DALI etc dimming)
- All exposed fasteners adopt 304 stainless steel(ocean platform 316 stainless steel optional). Effectively ensure light strength and corrosion resistance.

Main Specification

Item	Technical Parameters
Input voltage (V)	90~305VAC
Rated frequency	50Hz / 60Hz
Light source	LED
CRI	70(80 optional)
Life time (h)	50,000
CCT	5000K(3000K/4000K optional)
Leading-in cable diameter	Φ6mm~ Φ12mm
Terminal	Multi core: ≤ 4mm²
	Single core: ⩽ 6mm²
Dimension (mm)	295×330×350
Net weight (kg)	7.5

Ordering Reference

Order reference	Picture	Rated wattage (W)	Light output (lm)	Space height ratio	Mounting height (m)	Lighting distribution (1000cd/lm)	Equivalent to MH
ZY8605S□-L100-60°×80°		100W	11800	1.25	8~12m	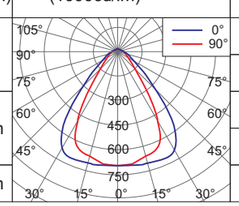	250W
ZY8605S□-L120-60°×80°		120W	13600				＞250W
ZY8605S□-L150-60°×80°		150W	17300		10~15m		400W
ZY8605S□-L200-60°×80°		200W	23300				＞400W
ZY8605S□-L240-60°×80°		240W	26700		15~20m		600W~800W

Ordering Reference

Order reference	Picture	Rated wattage (W)	Light output (lm)	Space height ratio	Mounting height (m)	Lighting distribution (1000cd/lm)	Equivalent to MH
ZY8605S□-L100-90°×110°		100W	11000	1.75	8~12m	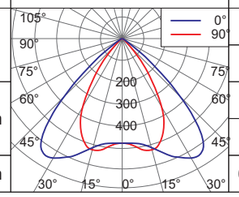	250W
ZY8605S□-L120-90°×110°		120W	12600				＞250W
ZY8605S□-L150-90°×110°		150W	16000		10~15m		400W
ZY8605S□-L200-90°×110°		200W	22000				＞400W
ZY8605S□-L240-90°×110°		240W	25300		15~20m		600W~800W

Note 1: the above model with light for the recommended distribution, but also according to the actual need to choose other light distribution.
Note 2: order number " " according to the actual installation needs fill in 1 or 2, S1 straight stent, S2 angle bracket.

Drawing of dimension (Dimensions in mm)

Seat mounting

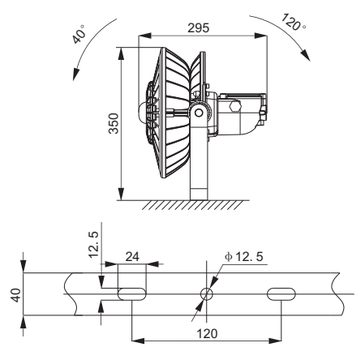

Side wall mounting

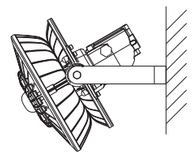

ZY8605S1

Seat mounting

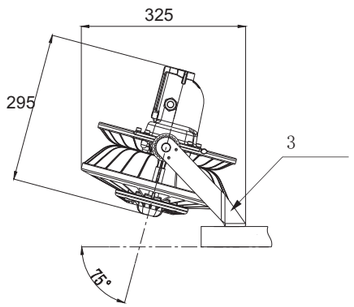

ZY8605S2

Pole mounting

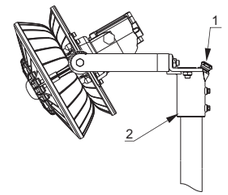

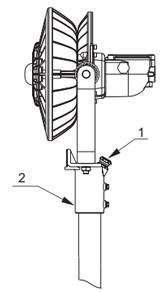

Order number	No.	Specification	Quantity	note
P07	1	Water proof connector M20	1	Suitable for Φ8mm-Φ12mm cable
	2	Pole mounting bracket	1	Suitable for DN32，DN40 pole