ZY8603P Series LED Lights(Pole)

TORMIN

LM79
LM84
IP 66
Ta 55
Ta -50



Characteristics

- Housing made of special aluminum processing, hardware and brackets adopt 304 stainless steel, using high-tech anti-corrosion surface treatment technology, can be long-term suitable for seaside, chlor-alkali, hydrogen sulfide and other highly corrosive areas.
- Superconducting aluminum comprehensive self-loop thermal design, long-term suitable for operating environment with high temperature and high humidity. Upper and lower ventilation fin structure, no dust.
- Variety of light distribution, variety of installation types, same shape, an effective solution to beautify workshop and device platform.
- The shell is made of high-tech surface treatment technology, corrosion resistant, waterproof and dustproof, suitable for harsh environments.
- It adopts imported light source, no dark zone in light spot, no ghosting, the entire lighting efficiency average up to 120lm / W, can save 60% or more on energy than the metal halide lamp.
- Taiwan Meanwell power supply or same quality power supply, power factor above 0.98, high reliability and long time service life.
- Independent side open increased safety wiring chamber, safe and easy installation and maintenance.
- It can quickly replace the light source without welding.
- Intelligent control functions (1 ~ 10VDC, PWM, carrier, DALI and other Dimming mode).

Application

Idea to be used in the platform water control room, fire water pump room and etc.



Main Specification

Item	Technical Parameters
Input voltage (V)	90~305VAC
	18~43VAC/ 18~55VDC (25~60W)
Rated frequency	50Hz / 60Hz
Light source	LED
Service life	50,000
CRI	Ra 70 (80 optional)
CCT	5000K(3000K/4000K optional)
Leading-in cable diameter	Φ10~ Φ14mm
Terminal	Multi core: ≤2.5mm^2
	Single core: ≤4mm^2
Dimension (mm)	Φ230×270
Net weight (kg)	4.2

Ordering Reference

Model number	Picture	Rated wattage (W)	Light output (lm)	Space height ratio	Mounting height (m)	Light distribution Curve(1000cd/lm)	Equivalent to MH
ZY8603P-L50-40°		50W	5400	0.7	5~8m	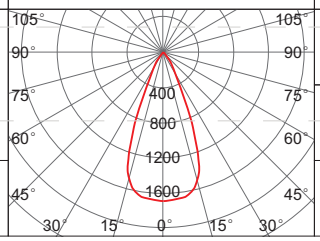	100W
ZY8603P-L60-40°		60W	6700				150W
ZY8603P-L80-40°		80W	8400		8~10m		175W

Model number	Picture	Rated wattage (W)	Light output (lm)	Space height ratio	Mounting height (m)	Light distribution Curve(1000cd/lm)	Equivalent to MH
ZY8603P-L30-60°		30W	3400	0.9	3~6m	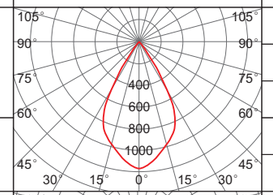	70W
ZY8603P-L40-60°		40W	4400				100W
ZY8603P-L50-60°		50W	5400				＞100W
ZY8603P-L60-60°		60W	6700		6~8m		150W
ZY8603P-L80-60°		80W	8400				175W
ZY8603P-L30-80°		30W	3500	1.35	3~6m	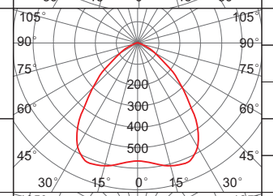	70W
ZY8603P-L40-80°		40W	4500				100W
ZY8603P-L50-80°		50W	5600				＞100W
ZY8603P-L60-80°		60W	6900		4~8m		150W
ZY8603P-L80-80°		80W	8700				175W
ZY8603P-L30-100°		30W	3500	1.4	3~6m	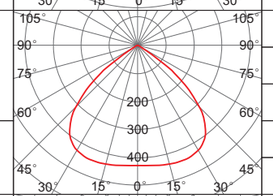	70W
ZY8603P-L40-100°		40W	4600				100W
ZY8603P-L50-100°		50W	5600				＞100W
ZY8603P-L60-100°		60W	7000		4~8m		150W
ZY8603P-L80-100°		80W	8800				175W
ZY8603P-L30-200°		30W	2800	1.75	2~5m	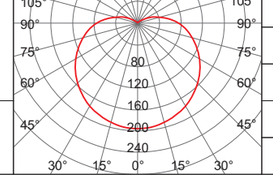	70W
ZY8603P-L40-200°		40W	3700				100W
ZY8603P-L50-200°		50W	4500				＞100W
ZY8603P-L60-200°		60W	5400		3~6m		150W
ZY8603P-L80-200°		80W	6800				175W
Low voltage: 18~43VAC/ 18~55VDC							
ZY8603P-L25D-60°		25W	2800	0.9	3~6m	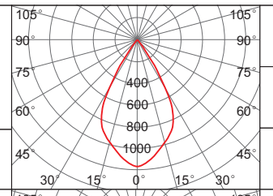	70W
ZY8603P-L40D-60°		40W	4400				100W
ZY8603P-L60D-60°		60W	6700		6~8m		150W
ZY8603P-L25D-80°		25W	2900	1.35	3~6m	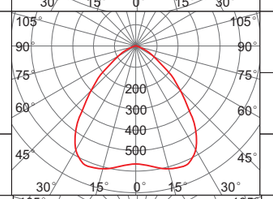	70W
ZY8603P-L40D-80°		40W	4600				100W
ZY8603P-L60D-80°		60W	6900		4~8m		150W
ZY8603P-L25D-100°		25W	2900	1.4	3~6m	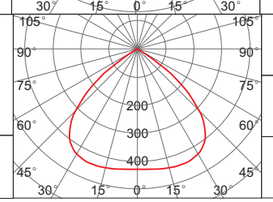	70W
ZY8603P-L40D-100°		40W	4600				100W
ZY8603P-L60D-100°		60W	7000		4~8m		150W

Model number	Picture	Rated wattage (W)	Light output (lm)	Space height ratio	Mounting height (m)	Light distribution Curve(1000cd/lm)	Equivalent to MH
ZY8603P-L25D-200°		25W	2400	1.75	2~5m	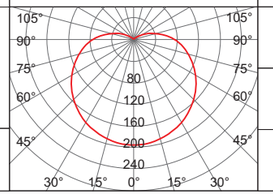	70W
ZY8603P-L40D-200°		40W	3700				100W
ZY8603P-L60D-200°		60W	5400		3~6m		150W

Note 1: the above model with light for the recommended distribution, but also according to the actual need to choose other light distribution.

Drawing of dimension (Dimensions in mm)

Flange mounting

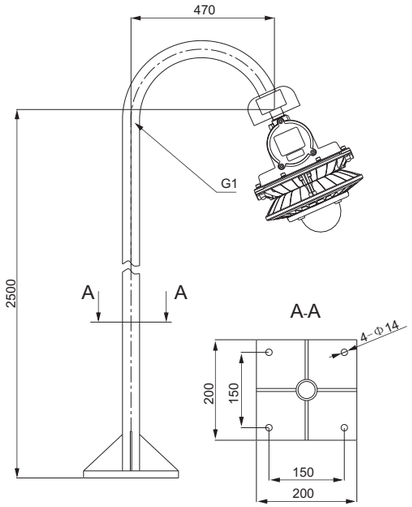

Accessories Ordering Information (optional)

Order number	No.	Specifications Model	Quantity
P06	1	Guardrail pole	1

Guardrail mounting

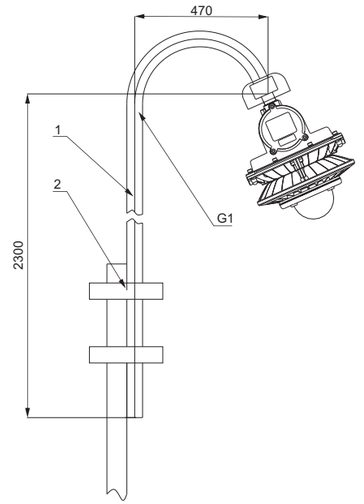

Accessories Ordering Information (optional)

Order number	No.	Specifications Model	Quantity
P05	1	Guardrail pole	1
	2	U-bolts	2

Wall mounting 90°

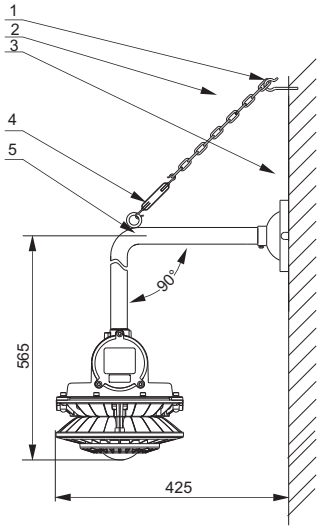

Accessories Ordering Information (optional)

Order number	No.	Specifications Model	Quantity
P16	1	Expansion screw hook	1
	2	Chain	1
	3	Suction cup	1
	4	C-C the turnbuckle	1
	5	90°bend pole(G3/4")	1

Wall mounting 150°

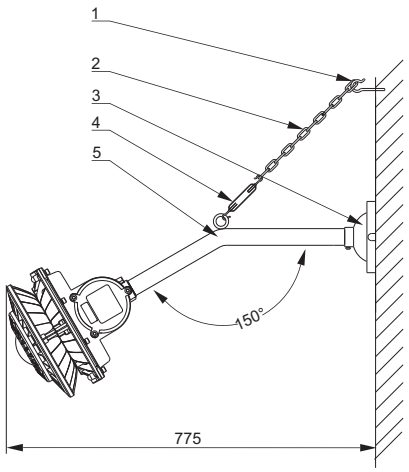

Accessories Ordering Information (optional)

Order number	No.	Specifications Model	Quantity
P15	1	Expansion screw hook	1
	2	Chain	1
	3	Suction cup	1
	4	C-C the turnbuckle	1
	5	150°bend pole (G3/4")	1

Ceiling mounting

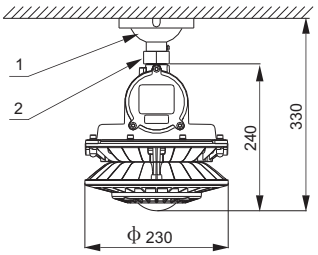

Accessories Ordering Information (optional)

Order number.	NO.	Specifications Model	Quantity
P17	1	Suction cup	1
	2	Adapt G3/4"(M-M)	1

Pole mounting

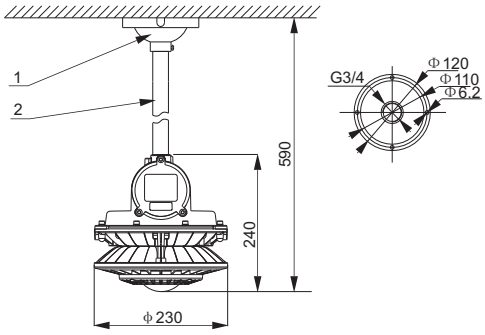

Accessories Ordering Information (optional)

Order number	No.	Specifications Model	Quantity
P14	1	Suction cup	1
	2	30cm straight pole(G3/4")	1