TORMIN BC9308P LED Explosion Proof Light(Pole)

Ex

CE

LM79
LM84

IP 66

Ta 55

Ta -40



Ex marking: Ex db IIC T4/ T5/ T6 Gb
Ex tb IIIC T130℃/ T95℃/ T80℃

Characteristics

- It is made using a special aluminum housing, All exposed fasteners adopt 304 stainless steel. Using high-tech anti-corrosion surface treatment technology, suitable for long-term highly corrosive environment of offshore oil platforms, oil drilling platform, chlor-alkali, vulcanization cyanide, etc.
- A full range of high conductivity material accelerate convection cooling structure, effective guarantee long-term use in high temperature environments.
- Variety of Light distribution and installation types under one lamp design, an effective solution to beautify workshop and device platform.
- Optoelectronic integrated technology, no dark spot, no ghosting, energy-saving is 60% more than Metal Halide Lamp.
- AC-DC wide voltage and constant power driver, can be long-term used in voltage instability places.
- Quick replay light source without welding.
  Windward area is only 30% of the traditional lamp, suitable for high-altitude winds area.

Application

- Suitable for oil drilling, refining platform, chemical petrol factory, pharmaceutical factory, polishing factory, etc.
- Gas explosive environment: Group IIA,IIB, IIC.
- Zone 1, zone 2;zone 21, zone 22.



Main Specification

Item	Technical Parameters
Input voltage (V)	90~264VAC(30~60W) or 185~264VAC (80W)
	18~43VAC/ 18~55VDC (30~60W)
Rated frequency	50Hz / 60Hz
Light source	LED
Life time (h)	50,000
CRI (Ra)	70 (80 optional)
CCT	5000K(3000K/4000K optional)
Cable entry	M20×1.5, M25×1.5, G3/4", NPT1/2", NPT3/4"
Dimension (mm)	Φ230×170
Net weight (kg)	3

Ordering reference

Ordering reference	Picture	Rated Wattage (W)	Light output (lm)	Space height ratio	Mounting height (m)	Light distribution curve(1000cd/lm)	Equivalent to MH
Input voltage: 90~264VAC							
BC9308P-L30-60°		30W	3400	0.9	3~6m	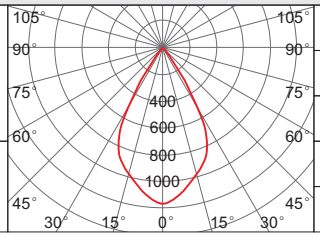	70W
BC9308P-L40-60°		40W	4400				100W
BC9308P-L50-60°		50W	5400				100W
BC9308P-L60-60°		60W	6700		6~8m		150W
BC9308P-L80-60°		80W	8400				175W

Note 1:Lens can be customized 60°×80°,90°×110°

TORMIN

BC9308P
LED Explosion Proof Light(Pole)

Ordering reference	Picture	Rated Wattage (W)	Light output (lm)	Space height ratio	Mounting height (m)	Light distribution curve(1000cd/lm)	Equivalent to MH
Input voltage: 90~264VAC							
BC9308P-L30-80°		30W	3500	1.35	3~6m	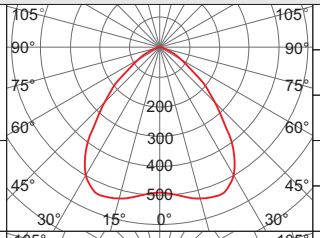	70W
BC9308P-L40-80°		40W	4500				100W
BC9308P-L50-80°		50W	5600				100W
BC9308P-L60-80°		60W	6900		5~8m		150W
BC9308P-L80-80°		80W	8700				175W
BC9308P-L30-100°		30W	3500	1.4	3~6m	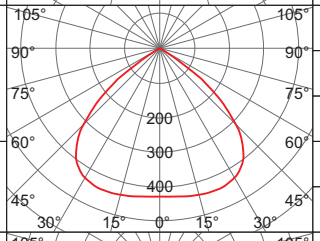	70W
BC9308P-L40-100°		40W	4600				100W
BC9308P-L50-100°		50W	5600				100W
BC9308P-L60-100°		60W	7000		4~8m		150W
BC9308P-L80-100°		80W	8800				175W
BC9308P-L30-200°		30W	2800	1.75	2~5m	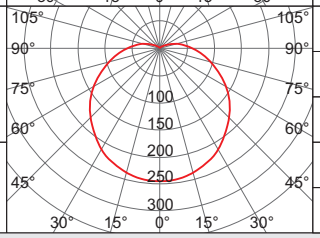	70W
BC9308P-L40-200°		40W	3700				100W
BC9308P-L50-200°		50W	4500				100W
BC9308P-L60-200°		60W	5400		3~6m		150W
BC9308P-L80-200°		80W	6800				175W
Input voltage: 18~43VAC/ 18~55VDC							
BC9308P-L25D-60°		25W	2800	0.9	3~6m	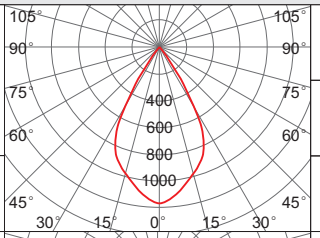	70W
BC9308P-L40D-60°		40W	4400				100W
BC9308P-L60D-60°		60W	6700		6~8m		150W
BC9308P-L25D-80°		25W	2900	1.4	3~6m	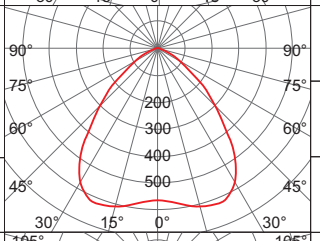	70W
BC9308P-L40D-80°		40W	4600				100W
BC9308P-L60D-80°		60W	6900		5~8m		150W
BC9308P-L25D-100°		25W	2900	1.4	3~6m	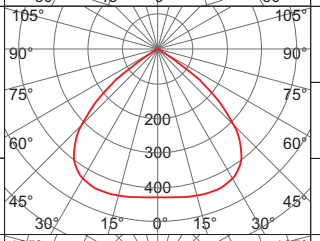	70W
BC9308P-L40D-100°		40W	4600				100W
BC9308P-L60D-100°		60W	7000		4~8m		150W
BC9308P-L25D-200°		25W	2400	1.75	2~5m	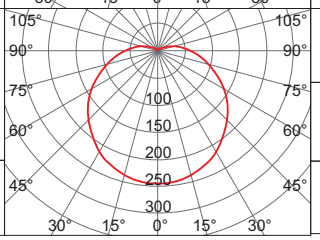	70W
BC9308P-L40D-200°		40W	3700				100W
BC9308P-L60D-200°		60W	5400		3~6m		150W

BC9308P
LED Explosion Proof Light(Pole)

Drawing of dimension (Dimensions in mm)

Wall mounting 90°

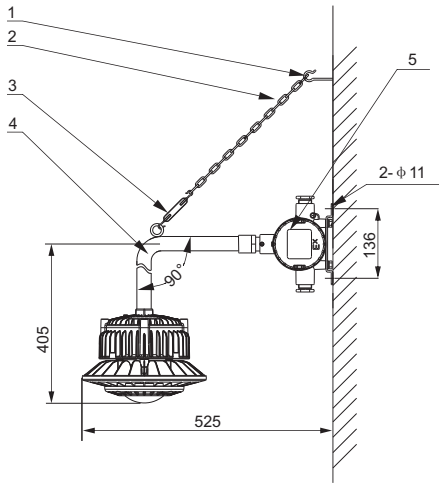

Wall mounting 150°

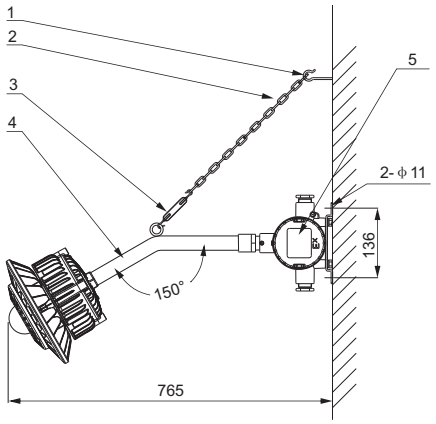

Accessories order information(Wall mounting 90deg)

Ordering reference	Item no.	Specification	quantity
P04	1	Expansion screw hook	1
	2	Chain	1
	3	C-C turn buckle	1
	4	G3/4" bend pipe 90°	1
BHD01	5	Explosion proof junction box	1

Accessories order information(Wall mounting 150deg)

Ordering reference	Item no.	Specification	quantity
P03	1	Expansion screw hook	1
	2	Chain	1
	3	C-C turn buckle	1
	4	G3/4" bend pipe 150°	1
BHD01	5	Explosion proof junction box	1