TORMIN BC9307S LED Explosion Proof Light(Bracket)

IECEx
ATEX
CE
LM79
LM84
IP 66
Ta 40/55
Ta -50



Ex marking: Ex db eb IIC T4/T3 Gb
Ex tb IIIC T130℃/T195℃ Db,IP66

Characteristics

- It is made using a special aluminum housing, all exposed fasteners and bracket adopt 304 stainless steel. Using high-tech anti-corrosion surface treatment technology, suitable for long-term highly corrosive environment of offshore oil platforms, oil drilling platform, chlor-alkali, vulcanization cyanide, etc.
- A full range of high conductivity material accelerate convection cooling structure, effective guarantee long-term use in high temperature environments.
- Variety of light distribution, variety of installation types, an effective solution to beautify workshop and device platform.
- The shell is made of high-tech surface coating technology, corrosion resistant, waterproof and dust proof, suitable for harsh environments.
- Optoelectronic integrated technology, no dark spot, no ghosting, the average light efficiency of whole lamp can reach to 120 lm/W, energy-saving is 60% more than Metal Halide Lamp.
- Taiwan Meanwell driver or driver with same quality, power factor above 0.98, high reliability and long time service life.
- Independent wiring chamber, safe and easy installation and maintenance.
- Quick replay light source without welding.
- Intelligent control functions can be realized.(Dimming: 1-10VDC, PWM, Carrier, DALI, etc.)

Application

- Ideal to be used in the oilfield, chemical industry, offshore drilling platform, steel industry, petroleum etc.
- Gas explosive environment: Group IIA, IIB, IIC.
- Zone 1, zone 2; zone 21, zone 22.



Main Specification

Item	Technical Parameters
Input voltage (V)	90~264VAC
Rated frequency	50Hz / 60Hz
CRI (Ra)	70 (80 optional)
Life time (h)	50,000
CCT	5000K(3000K/4000K optional)
Cable entry	M20×1.5, G3/4", NPT1/2"
Terminals	Multi core: ≤4mm ^{2}
	Single core: ≤6mm ^{2}
Dimension (mm)	295×330×350
Net weight (kg)	7.5

Ordering Reference

Ordering reference	Picture	Rated Wattage (W)	Light output (lm)	Space height ratio	Mounting height (m)	Light distribution Curve(1000cd/lm)	Equivalent to MH
BC9307S□-L100-60°×80°		100W	11800	1.25	8~12m	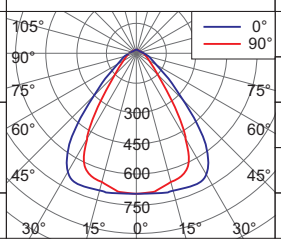	250W
BC9307S□-L120-60°×80°		120W	13600				>250W
BC9307S□-L150-60°×80°		150W	17300		10~15m		400W
BC9307S□-L200-60°×80°		200W	23300				>400W
BC9307S□-L240-60°×80°		240W	26700		15~20m		600W~800W

BC9307S
LED Explosion Proof Light(Bracket)

Ordering Reference

Ordering reference	Picture	Rated Wattage (W)	Light output (lm)	Space height ratio	Mounting height (m)	Light distribution curve(1000cd/lm)	Equivalent to MH
BC9307S□-L100-90°×110°		100W	11000	1.75	8~12m	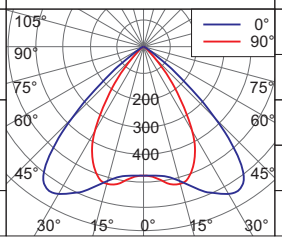	250W
BC9307S□-L120-90°×110°		120W	12600				＞250W
BC9307S□-L150-90°×110°		150W	16000		10~15m		400W
BC9307S□-L200-90°×110°		200W	22000				＞400W
BC9307S□-L240-90°×110°		240W	25300		15~20m		600W~800W

Note 1:Lens can be customized 40°,60°,80°,100°

Note 2: order number "□"according to the actual installation needs fill in 1 or 2, S1 straight stent, S2 angle bracket.

Drawing of dimension (Dimensions in mm)

Seat mounting

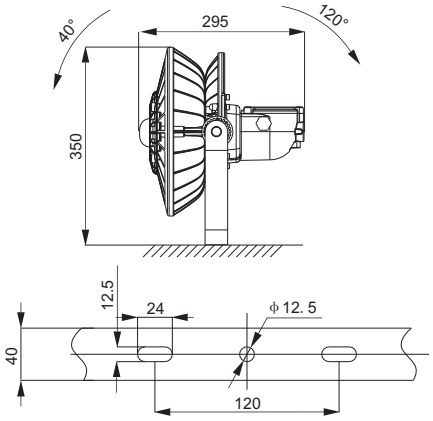

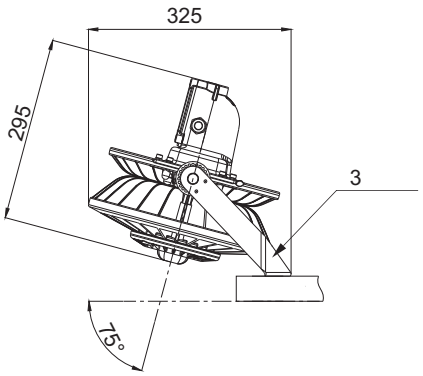

Side wall mounting

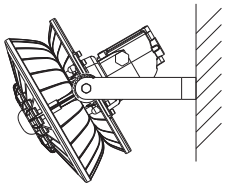

Pole mounting

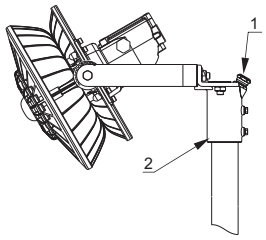

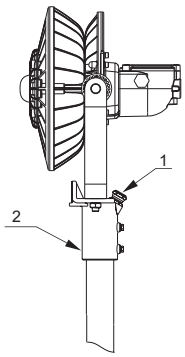

Accessories ordering information(optional)

Ordering reference	Item no	Specification	quantity
P23	3	Inclined bracket	1

Accessories ordering information(optional)

Ordering reference	Item no	Specification	quantity	note
P07	1	Water proof plug M20	1	Φ8~Φ12mm cable
	2	Vertical Mounting pole	1	Φ40~Φ50mm pole