TORMIN BC9306S LED Explosion Proof Light (Bracket -Spotlight)



Ex marking: Ex db eb IIC T6/T5/T4 Gb
Ex tb IIIC T80℃/T95℃/T130℃ Db,IP66

Characteristics

- It is made using a special aluminum housing, all exposed fasteners and bracket adopt 304 stainless steel. Using high-tech anti-corrosion surface treatment technology, suitable for long-term highly corrosive environment of offshore oil platforms, oil drilling platform, chlor-alkali, vulcanization cyanide, etc.
- A full range of high conductivity material accelerate convection cooling structure, effective guarantee long-term use in high temperature environments.
- Variety of light distribution, variety of installation types, an effective solution to beautify workshop and device platform.
- The shell is made of high-tech surface coating technology, corrosion resistant, waterproof and dust proof, suitable for harsh environments.
- Optoelectronic integrated technology,no dark spot, no ghosting, the average light efficiency of whole lamp can reach to 120 lm/W, energy-saving is 60% more than Metal Halide Lamp.
- Taiwan Meanwell power supply or same quality power supply, power factor above 0.98, high reliability and long time service life.
- Independent wiring chamber, safe and easy installation and maintenance.
- Quick replay light source without welding.
- Intelligent control functions can be realized.(Dimming: 1-10VDC, PWM, Carrier, DALI, etc.)

Application

- Ideal to be used in the oilfield, chemical industry, offshore drilling platform, steel industry, petroleum etc.
- Gas explosive environment: Group IIA,IIB,IIC.
- Zone 1,zone 2;zone 21,zone 22.

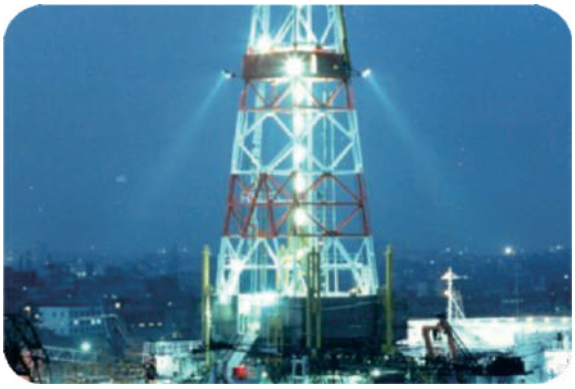

Main Specification

Item	Technical Parameters
Input voltage (V)	90~264VAC
Rated frequency	50Hz / 60Hz
CRI (Ra)	70 (80 optional)
Life time (h)	50,000
CCT	5000K(3000K/4000K optional)
Cable entry	M20×1.5, NPT1/2"
Terminals	Multi core: ≤2.5mm ^{2}
	Single core: ≤4mm ^{2}
Dimension (mm)	291×260×270
Net weight (kg)	5.4

Ordering Reference

Ordering reference	Picture	Rated Wattage (W)	Light output (lm)	Light distribution curve(1000cd/lm)	Equivalent to MH
BC9306S-L60-18°		60W	5900	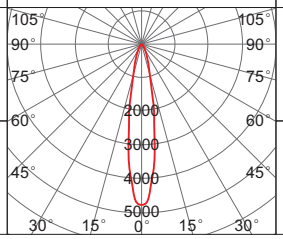	150W
BC9306S-L80-18°		80W	7500		175W

BC9306S LED Explosion Proof Light (Bracket -Spotlight)

Drawing of dimension (Dimensions in mm)

Seat mounting

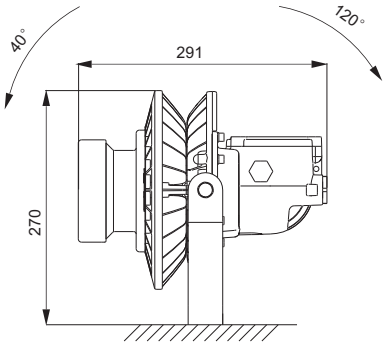

Ceiling mounting

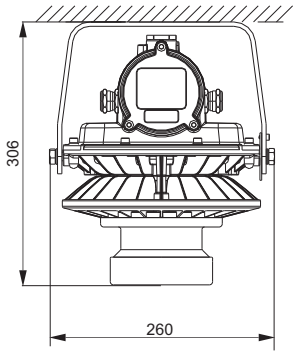

Side wall mounting

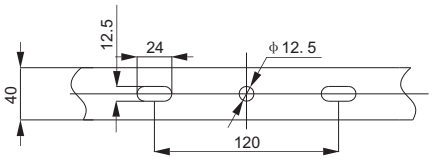

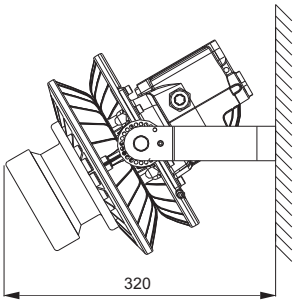

Pole mounting

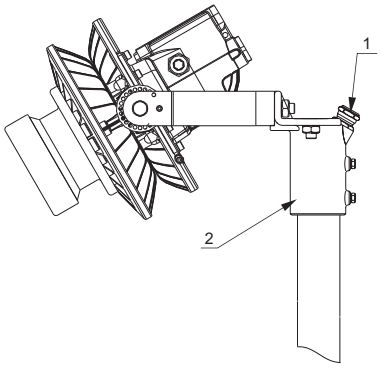

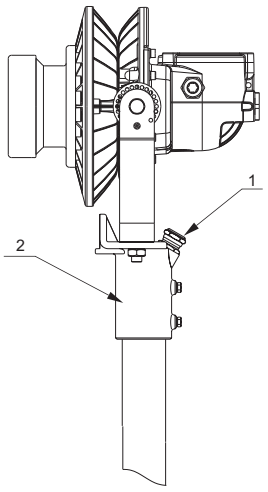

Accessories ordering information(optional)

Ordering reference	Item no	Specification	quantity	note
P07	1	Water proof plug M20	1	ϕ8~ϕ12mm cable
	2	Vertical Mounting pole	1	ϕ40~ϕ50mm pole