TORMIN BC9306P LED Explosion Proof Light(Pole)

IECEx
ATEX
CE
RoHS
LM79
LM84
IP 66
Ta 40/55
Ta -50



Ex marking: Ex db eb IIC T6/T5/T4 Gb
Ex tb IIIC T80℃/T95℃/T130℃ Db,IP66

Characteristics

- It is made using a special aluminum housing, all exposed fasteners adopt 304 stainless steel. Using high-tech anti-corrosion surface treatment technology, suitable for long-term highly corrosive environment of offshore oil platforms, oil drilling platform, chlor-alkali, vulcanization cyanide, etc.
- A full range of high conductivity material accelerate convection cooling structure, effective guarantee long-term use in high temperature environments.
- Variety of light distribution, variety of installation types, an effective solution to beautify workshop and device platform.
- The shell is made of high-tech surface coating technology, corrosion resistant, waterproof and dust proof, suitable for harsh environments.
- Optoelectronic integrated technology, no dark spot, no ghosting,, energy-saving is 60% more than Metal Halide Lamp.
- Taiwan Meanwell power supply or same quality power supply, power factor above 0.98, high reliability and long time service life.
- Independent wiring chamber, safe and easy installation and maintenance.
- Quick replay light source without welding.
- Intelligent control functions can be realized.(Dimming: 1-10VDC, PWM, Carrier, DALI, etc.)

Application

- Ideal to be used in the oilfield, chemical industry, offshore drilling platform, steel industry, petroleum etc.
- Gas explosive environment: Group IIA,IIB,IIC.
- Zone 1,zone 2;zone 21,zone 22.



Main Specification

Item	Technical Parameters
Input voltage (V)	90~264VAC
	18~43VAC/ 18~55VDC
Rated frequency	50Hz / 60Hz
Light source	LED
CRI (Ra)	70 (80 optional)
Life time (h)	50,000
CCT	5000K(3000K/4000K optional)
Cable entry	M20×1.5, M25×1.5, G3/4", NPT1/2", NPT3/4"
Dimension (mm)	Φ230×270
Net weight (kg)	4.2

Ordering reference

Ordering reference	Picture	Rated Wattage (W)	Light output (lm)	Space height ratio	Mounting height (m)	Light distribution Curve(1000cd/lm)	Equivalent to MH
BC9306P-L30-80°		30W	3500	1.4	3~6m	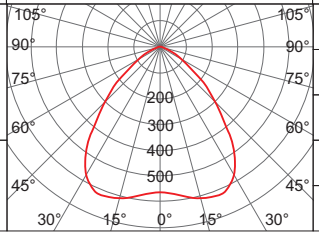	70W
BC9306P-L40-80°		40W	4500				100W
BC9306P-L50-80°		50W	5600				＞100W
BC9306P-L60-80°		60W	6900		4~8m		150W
BC9306P-L80-80°		80W	8700				175W

BC9306P
LED Explosion Proof Light(Pole)

Ordering reference	Picture	Rated Wattage (W)	Light output (lm)	Space height ratio	Mounting height (m)	Light distribution Curve(1000cd/lm)	Equivalent to MH
BC9306P-L30-100°		30W	3500	1.4	2~6m	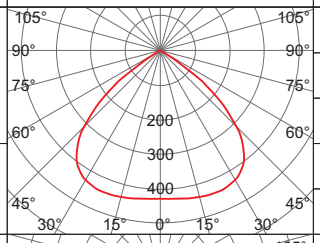	70W
BC9306P-L40-100°		40W	4600				100W
BC9306P-L50-100°		50W	5600				＞100W
BC9306P-L60-100°		60W	7000		2~8m		150W
BC9306P-L80-100°		80W	8800				175W
BC9306P-L30-200°		30W	2800	1.75	2~5m	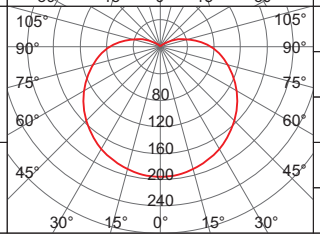	70W
BC9306P-L40-200°		40W	3700				100W
BC9306P-L50-200°		50W	4500				＞100W
BC9306P-L60-200°		60W	5400		3~6m		150W
BC9306P-L80-200°		80W	6800				175W
Input voltage: 18~43VAC/ 18~55VDC							
BC9306P-L25L-80°		25W	2900	1.4	3~6m	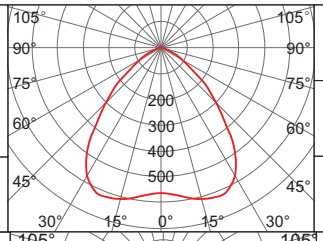	70W
BC9306P-L40L-80°		40W	4600				100W
BC9306P-L60L-80°		60W	6900		4~8m		150W
BC9306P-L25L-100°		25W	2900	1.4	2~6m	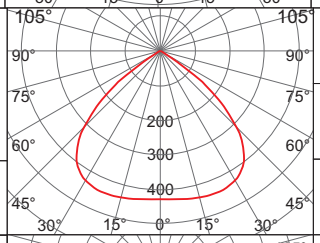	70W
BC9306P-L40L-100°		40W	4600				100W
BC9306P-L60L-100°		60W	7000		2~8m		150W
BC9306P-L25L-200°		25W	2400	1.75	2~5m	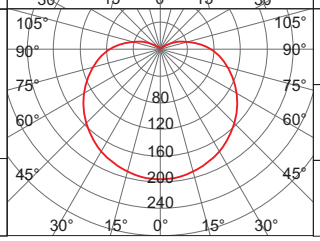	70W
BC9306P-L40L-200°		40W	3700				100W
BC9306P-L60L-200°		60W	5400		3~6m		150W

Note 1:Lens can be customized 60°×80°,90°×110°

BC9306P
LED Explosion Proof Light(Pole)

Drawing of dimension (Dimensions in mm)

Pole mounting

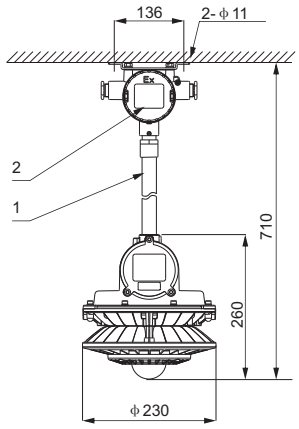

Wall mounting 150deg

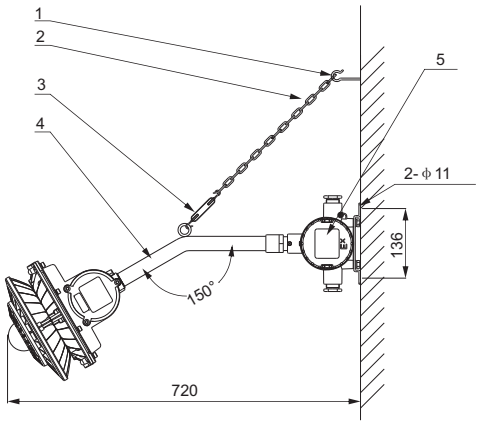

Accessories order information(Pole mounting)

Ordering reference	Item no.	Specification	quantity
P01	1	G3/4" pole 30cm	1
BHD01	2	Explosion proof junction box	1

Accessories order information(Wall mounting 150deg)

Ordering reference	Item no.	Specification	quantity
P03	1	Expansion screw hook	1
	2	Chain	1
	3	C-C turn buckle	1
	4	G3/4" bend pipe 150°	1
BHD01	5	Explosion proof junction box	1

BC9306P
LED Explosion Proof Light(Pole)

Wall mounting 90deg

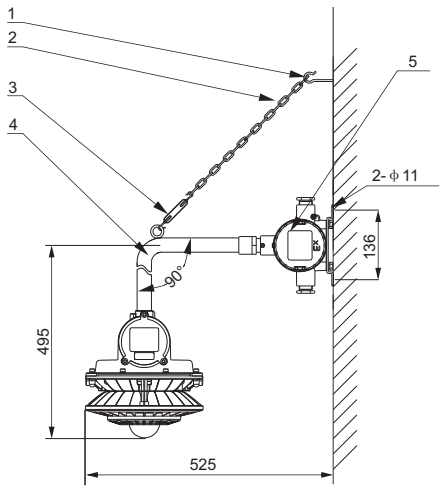

Accessories order information(Wall mounting 90deg)

Ordering reference	Item no.	Specification	quantity
P04	1	Expansion screw hook	1
	2	Chain	1
	3	C-C turn buckle	1
	4	G3/4" bend pipe 90°	1
BHD01	5	Explosion proof junction box	1

Guardrail mounting

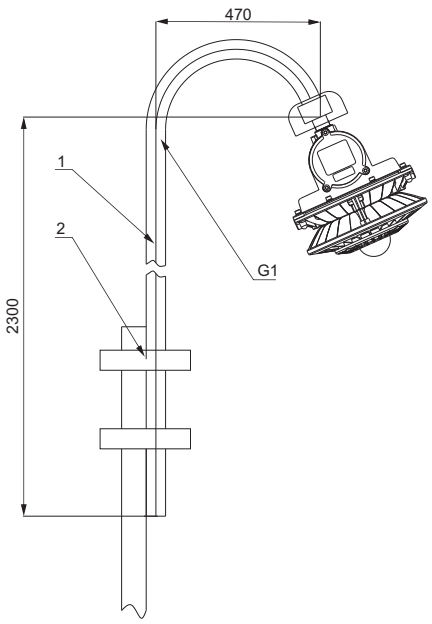

Accessories order information(Guardrail mounting)

Ordering reference	Item no.	Specification	quantity
P05	1	fence pole	1
	2	U type bolts	2

Ceiling mounting

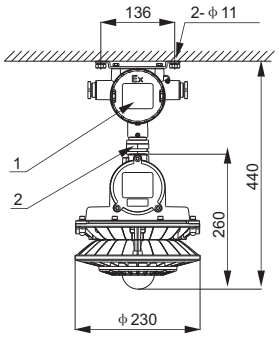

Accessories order information(ceiling mounting)

Ordering reference	Item no.	Specification	quantity
BHD01	1	Explosion proof junction box	1
P02	2	Adapter G3/4"(female - male)	1

Flange mounting

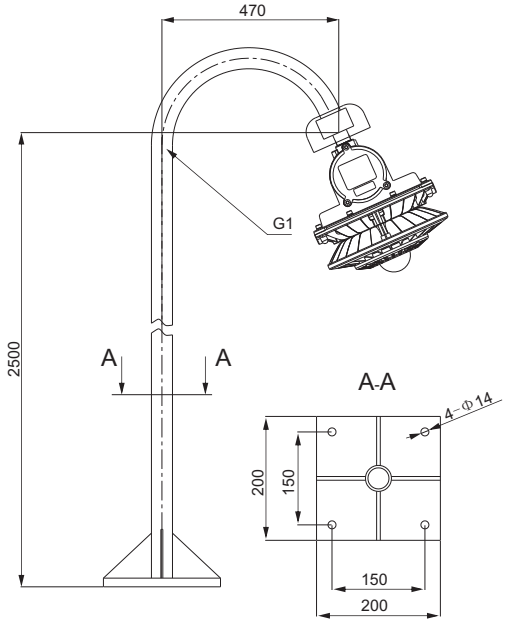

Accessories order information(Flange mounting)

Ordering reference	Item no.	Specification	quantity
P06	1	Flange pole	1