TORMIN BHD series Explosion Proof Junction Box

IECEx ATEX IP 66 Ta 60 Ta -50



BHD01



BHD02

Ex Marking: Ex db IIC T6 Gb
Ex tb IIIC T80°C Db IP66

Application

Used as a junction box and mounting element for lighting equipment installed in explosion hazardous areas, like petrochemical plants, chemical plants, pharmaceutical factory, polishing plant, etc.

Characteristics

- The junction box has the characteristics of small volume, light weight, convenient installation, etc.
- The shell adopts anti-corrosive processing, standard for the 304 stainless steel material, using high-tech surface anti-corrosion treatment technology, applicable to all kinds of bad industrial environment.

Ordering Reference

Item	Technical Parameters		
Type	BHD01A	BHD01B	BHD02
Picture	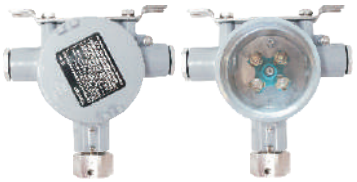	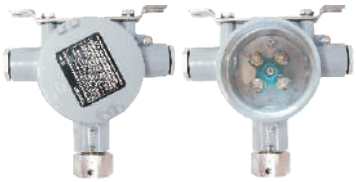	
Input voltage (V)	⩽500V		
Rated frequency	50Hz / 60Hz		
Rated current	＜20A		
Cord section	0.75~2.5mm²		
Cable entry	G3/4"	M25×1.5 or M20×1.5 or NPT3/4" or NPT1/2"	M25×1.5 or M20×1.5 or NPT3/4" or NPT1/2"
Dimension (mm)	185×185×75	185×185×75	116×116×75
Cable entry quantity	2	2	4
Drop cable quantity	1	1	/
Weight (kg)	1.2		0.8

Cable entry

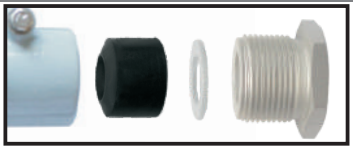

BHD01A(Standard) (G3/4" accessories)

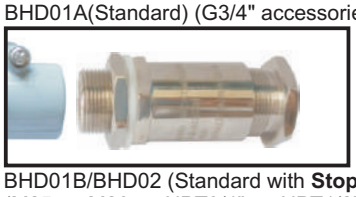

BHD01B/BHD02 (Standard with **Stopping plug**)
(M25 or M20 or NPT3/4" or NPT1/2")
(**"Ex D" gland optional**)

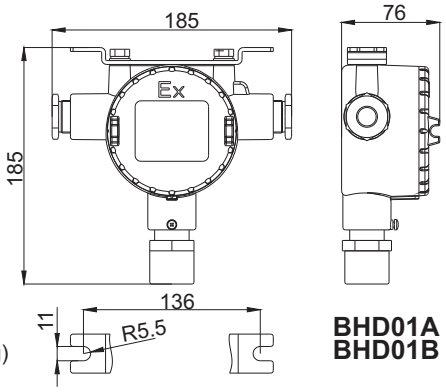

BHD01A
BHD01B

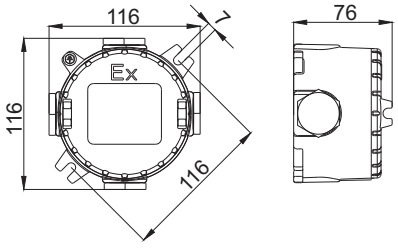

BHD02