ZY8606S Series
LED Lights(Bracket cast light)

TORMIN

ABS

CE

LM79

LM84

IP 66

Ta 55

Ta -40



Characteristics

- Super power, maximum power up to 480W, can replace more than 1000W metal halide lamps and sodium lamps.
- Housing made of special aluminum processing, hardware and brackets adopt 304 stainless steel, using high-tech anti-corrosion surface treatment technology, can be long-term suitable for seaside, chlor-alkali, hydrogen sulfide and other highly corrosive areas.
- Superconducting aluminum comprehensive self-loop thermal design, long-term suitable for operating environment with high temperature and high humidity. Upper and lower ventilation fin structure, no dust.
- Variety of light distribution, variety of installation types, same shape, an effective solution to beautify workshop and device platform.
- It adopts Imported light source, no dark zone in light spot, no ghosting, can save 60% or more on energy than the metal halide lamp.
- AC and DC wide voltage constant power supply, power factor above 0.98.
- It can quickly replace the light source without welding.
- Independent wiring chamber, safe and convenient for installation and maintenance.
- According to user needs, can choose light fixtures with a variety of intelligent control.

Application

Suitable as long distance cast lighting for offshore platform equipment, cargo terminal, stockyard and other high, medium installation height wet corrosive environments.



Main Specification

Item	Technical Parameters
Input voltage (V)	90~305VAC
Rated frequency	50Hz / 60Hz
Light source	LED
Life time (h)	50,000
CRI	Ra 70 (80 optional)
CCT	5000K(3000K/4000K optional)
Leading-in cable diameter	Φ8mm~ Φ12mm
Dimension (mm)	602×270×340
Net weight (kg)	13.5



ZY8606S Series
LED Lights(Bracket cast light)

Ordering Reference

Model number	Picture	Rated wattage (W)	Light output (lm)	Light distribution Curve(1000cd/lm)	Equivalent to MH
ZY8606S□-L240-18°		240W	23000	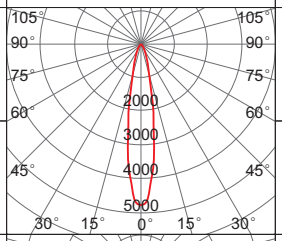	600W
ZY8606S□-L300-18°		300W	29200		600W-1000W
ZY8606S□-L400-25°		400W	40600	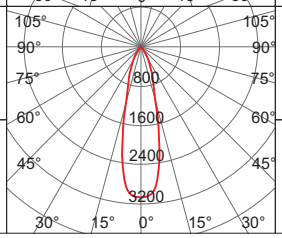	1000W
ZY8606S□-L480-25°		480W	47000		＞1000W

Note : order number "□" according to the actual installation needs fill in 1 or 2, S1 straight stent, S2 angle bracket.

Drawing of dimension (Dimensions in mm)

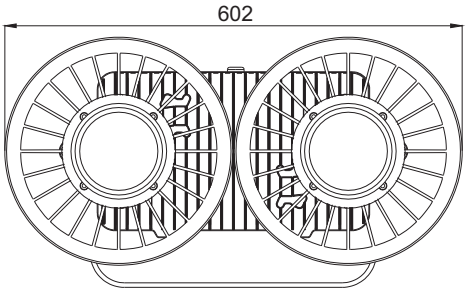

Seat mountingS1

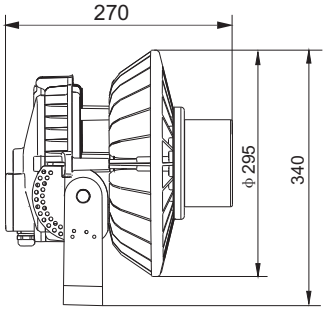

ZY8606S1

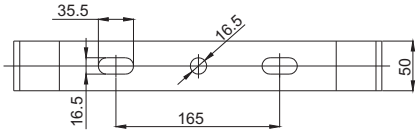

Installation Dimension

Seat mountingS2

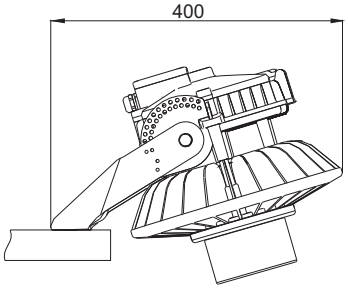

ZY8606S2