ZY8606SC Series LED Lights (Dedicated for bridge crane)

TORMIN

IP 66

Ta 45

Ta -40

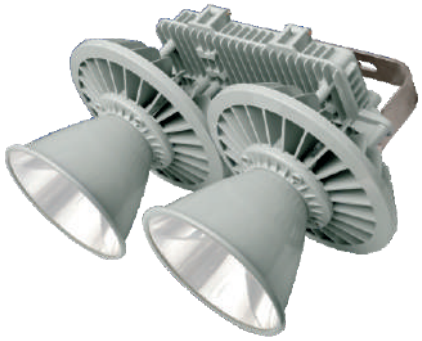

Characteristics

- High-power LED lighting fixtures can be a perfect replacement for 1000W HID light fixtures
- The lamp structure is made of anti-corrosion aluminum. The surface is coated with outdoor pure resin anti-corrosion plastic powder. The hardware and screws are made of SUS304 stainless steel and can be applied to the offshore environment for a long period of time.
- Luminaire machinery and electrical structures have superior anti-vibration capabilities and are particularly suitable for strong vibration areas such as shore machines.
- Radiator material is made of superconducting aluminum alloy material, thermal conductivity is 2.5 times that of ordinary aluminum alloy material; Radiator is designed as a fin-type all-round self-circulating permeation structure, high heat dissipation efficiency, no heat accumulation, no dust accumulation
- The luminaire is equipped with a variety of light distribution angles and installation methods, which can be used in combination to solve ultra-long distance and large area lighting
- Lamps have independent wiring chambers, no need to install junction box when installing, save time and cost
- The lamp light source and power supply are designed for quick replacement of the weld-free structure, enabling quick repair on site
- International famous brands of light sources, the average lighting efficiency up to 120lm/W, 60% more than the metal halide lamp energy saving
- Select high-end brand (Ming Wei, Infinity) aluminum shell seal outdoor power supply, wide input range, constant current and constant voltage output, high power factor, high efficiency, two-stage PFC, anti-lightning surge, ensure the long-term stable and efficient lamps Output
- Two inlets can be customized according to customer requirements and used in parallel as wiring.

Application

Special for landing machine beam (crane)



Main Specification

Item	Technical Parameters
Input voltage (V)	90~305VAC
Rated frequency	50Hz / 60Hz
Light source	LED
Life time (h)	50,000
CRI	Ra 65
CCT	3000K(4000K/5000K optional)
Leading-in cable diameter	Φ8mm~ Φ12mm
Dimension (mm)	602×300×440
Net weight (kg)	15

Ordering Reference

Model number	Picture	Rated wattage (W)	Light output (lm)	Space height ratio	Mounting height(m)	Light distribution Curve(1000cd/lm)	Equivalent to MH
ZY8606SC-L240-18°		240W	23000	0.4	25-45m	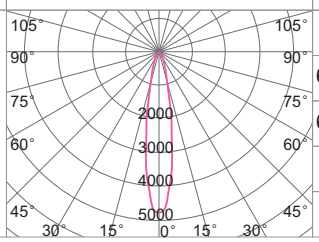	600W
ZY8606SC-L300-18°		300W	29200				600W-1000W
ZY8606SC-L360-18°		360W	36000				600W-1000W
ZY8606SC-L400-25°		400W	40600				1000W
ZY8606SC-L480-25°		480W	47000				＞1000W

ZY8606SC Series LED Lights (Dedicated for bridge crane)

Model number	Picture	Rated wattage (W)	Light output (lm)	Light distribution Curve(1000cd/lm)	Equivalent to MH
ZY8606SC -L240-9°		240W	23000	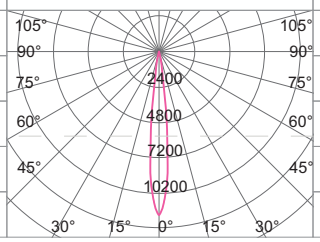	600W
ZY8606SC-L300- 9°		300W	29200		600W-1000W
ZY8606SC-L360- 9°		360W	36000		600W-1000W
ZY8606SC -L400-12°		400W	40600		1000W
ZY8606SC-L480- 12°		480W	47000		＞1000W

Drawing of dimension (Dimensions in mm)

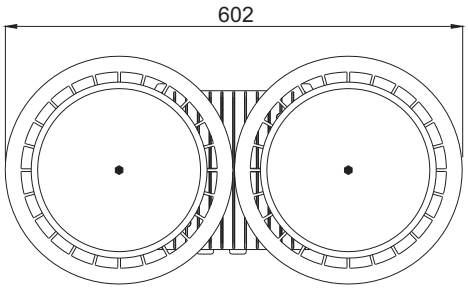

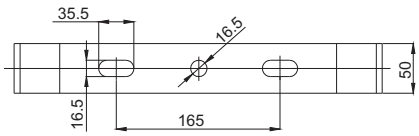

Installation Dimension

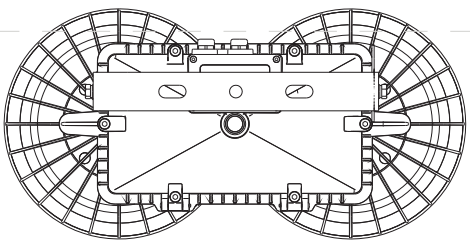

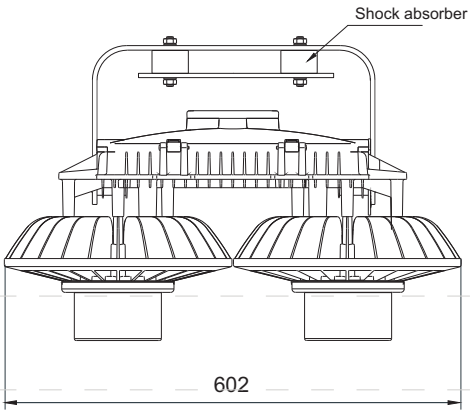

18°/25°

Sidewall mounted

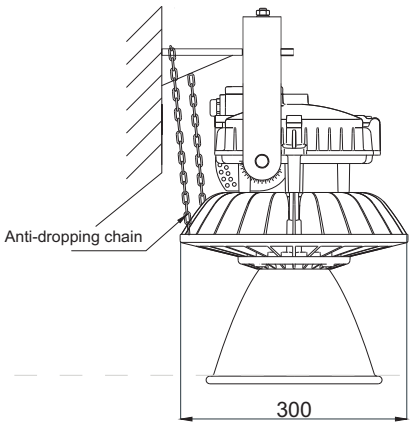

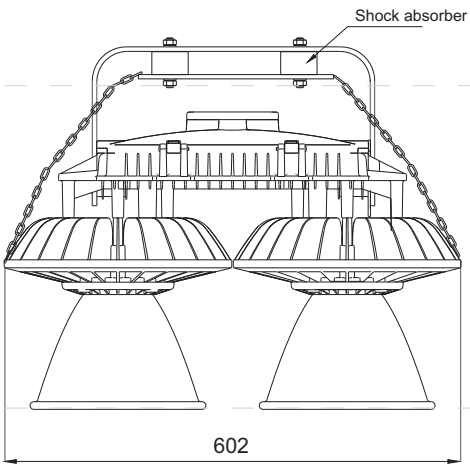

9°/12°