IP65 Ta45 Ta-25



Executive standard: GB7000/GB17625/GB17743



Application

Suitable for streets, roads, highways, square, parks, parking lots, etc.

Characteristic

- The light source power source is separated for heat dissipation, with good heat dissipation effect, long lifetime, suitable for high temperature and high humidity outdoor environment;
- American Lumileds light source, the overall light efficiency is as high as 120lm/W on average, which is more than 60% energy-saving compared with the metal halide lamp;
- Use high-end brands (MEAN WELL, Inventronics) aluminum shell plastic-sealed outdoor special power supply, wide input range, constant current and constant voltage output, high power factor, high efficiency, dual-stage PFC, anti-lightning surge, and ensure long-term stability of the lamp Efficient output;
- The protection level of the whole lamp reaches IP65, which can be used in various indoor and outdoor sand, dust or rain and fog environments for a long time.

Light distributor curve

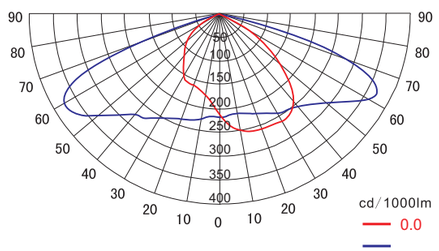

Main specification

Item	Technical Parameters
Input voltage	90~264VAC
Rated frequency	50Hz / 60Hz
Light source	LED
Life time	100,000hrs
CRI	Ra 70
CCT	2200K~6500K

Ordering Reference

Model number	Rated wattage (W)	Light output(lm)	Dimension(mm)	Mounting height(m)	Net weight(Kg)	Equivalent to HPS
ZY8705-L50	50W	6000	664 (L) ×243 (W) ×96	6~8m	3.8	175W
ZY8705-L80	80W	9600				175W~250W
ZY8705-L100	100W	12000				250W
ZY8705-L120	120W	14400	719 (L) ×297 (W) ×96		4.9	250W~400W
ZY8705-L150	150W	18000		8~12m		400W

Installation and selection

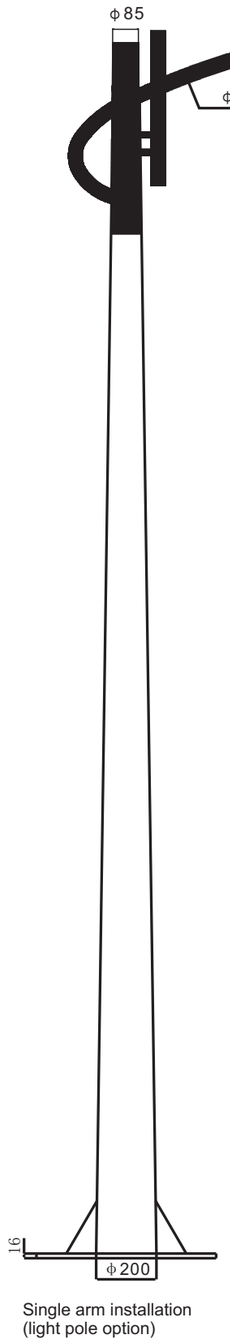

Single arm installation
(light pole option)

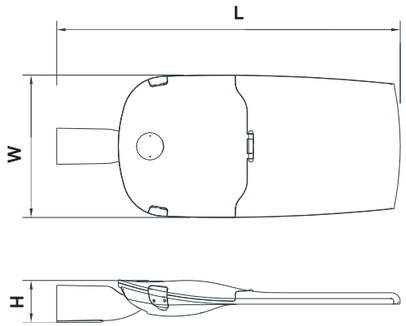

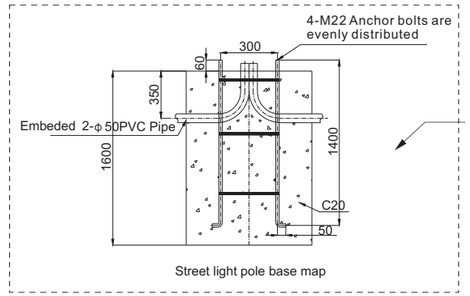

Street light pole base map

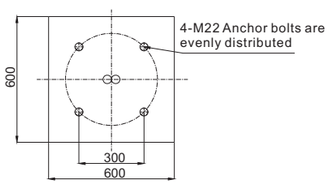

Street light pole base map

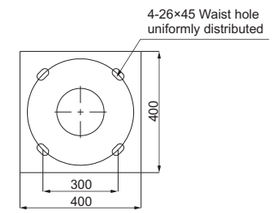

Schematic diagram of bottom flange

Accessories ordering information (optional)

Item No	No.	Specification	QTY
P22	1	8m light pole	1
P26	1	4m light pole	1
P27	1	6m light pole	1
P25	2	Embedded parts	1