ZY8502A LED High Bay Light

TORMIN

IP 65
Ta 50
Ta -40



Characteristics

- Using high-tech surface coating technology, wear-resistant and anti-corrosion, waterproof and dustproof, suitable for a variety of harsh environments;
- Radiator with a full range of self-cycle design, effective guarantee long-term use for high temperature and humidity operating environment; upper and lower ventilation fin structure, no dust.
- Lamps with Philips light source, no dark spot, the average light efficiency of whole light up to 110lm / W, energy-saving is 60% more than metal halide light.
- Power supply with AC and DC wide voltage constant power, power factor up to 0.98.

Application

Suitable for plant lighting with 10 ~ 25 meters installation height.



Main Specification

Item	Technical Parameters
Input voltage range (V)	90 ~ 305VAC
Rated frequency	50Hz / 60Hz
Light source	LED
Life time (h)	50,000
CRI	Ra 70 (80 optional)
CCT	5000K(3000K/4000K optional)
Dimension (mm)	Φ300×182 (80W/ 100W/ 120W)
	Φ340×182 (150W/ 200W)
Net weight (kg)	3.2 (80W/ 100W/ 120W); 4.5 (150W/ 200W)

Ordering Reference

Model number	Picture	Rated wattage (W)	Light output (lm)	Space height ratio	Mounting height (m)	Light distribution curve(1000cd/lm)	Equivalent to MH
ZY8502A-L80-45°		80W	9150	0.9	6~8	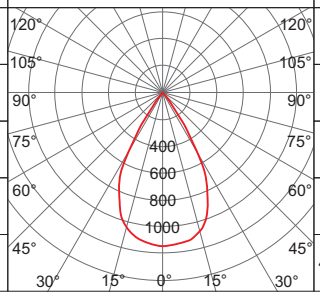	＞150W
ZY8502A-L100-45°		100W	10760		7~10		250W
ZY8502A-L120-45°		120W	12400		8~10		＞250W
ZY8502A-L150-60°		150W	17450		8~15		400W
ZY8502A-L200-60°		200W	21700		10~20		400W~600W

Drawing of dimension (Dimensions in mm)

Ring mounting (Standard)

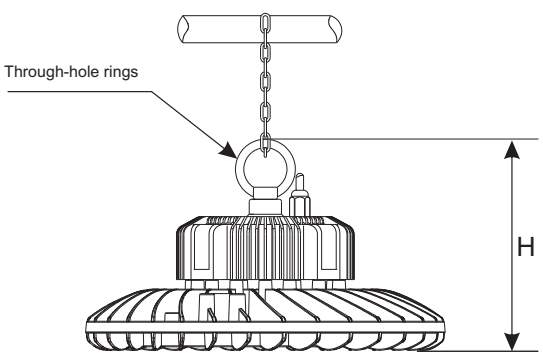

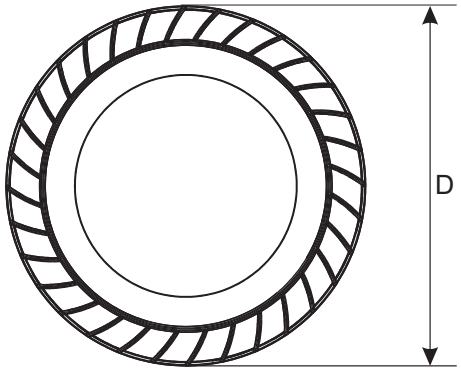

Order number	Rated Wattage(W)	D(mm)	H(mm)
ZY8502A	150W/200W	340	182
ZY8502A	80W/100W/120W	300	182