IP 66

Ta 40

Ta -40



Application

The products are widely used in high-shed factories, workshops, warehouses, logistics centers, exhibition halls, gymnasiums, shipyards, highway toll stations, gas stations, supermarkets, farmer's markets, and other places that require large-area lighting.

Characteristics

1. Multiple high-power light sources are evenly distributed and separated in the power supply design, with good heat dissipation effect, long life of the lamp, suitable for high temperature and high humidity working environment;
2. The lamps have high anti-corrosion and anti-vibration capabilities, and are suitable for various large-area top-mounted industrial operating environments;
3. The internationally renowned brand light source, the overall light efficiency is more than 110lm/W on average, which is more than 60% energy-saving compared with the same period in the metal halide lamp;
4. Use high-end brand aluminum housing sealant outdoor special power supply, wide input range, constant current and constant voltage output, high power factor, high efficiency, anti-lightning surge, and ensure long-term stable and efficient output of lamps.

Installation and Selection

Model number	Rated wattage (W)	Light output (lm)	Mounting height	Light distribution curve (1000cd/lm)	Net weight (Kg)	Dimensions (mm)	Equivalent to HPS
ZY8509A/B-L50-90°	50W	>5500	3~6m	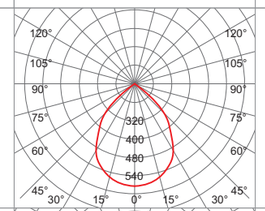	2.3	ϕ370(W)×175(H)	100W~150W
ZY8509A/B-L80-90°	80W	>8800					175W
ZY8509A/B-L100-90°	100W	>11000					250W
ZY8509A/B-L120-60°	120W	>13200	5~8m	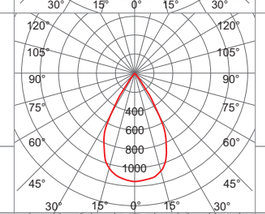	2.5		250W~400W
ZY8509A/B-L150-60°	150W	>16500					400W
ZY8509A/B-L200-60°	200W	>22000	8~12m		3.0	ϕ450(W)×200(H)	400W~600W
ZY8509A/B-L120-90°	120W	>13200	5~8m	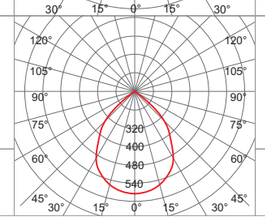	2.5	ϕ370(W)×175(H)	250W~400W
ZY8509A/B-L150-90°	150W	>16500					400W
ZY8509A/B-L200-90°	200W	>22000	8~12m		3.0	ϕ450(W)×200(H)	400W~600W

Installation and Selection

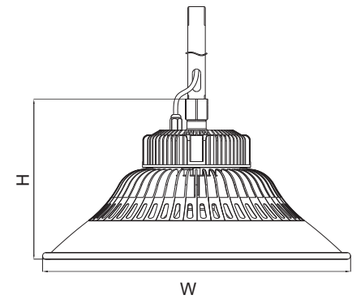

Pole mounted

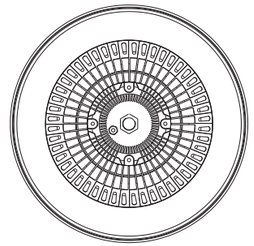

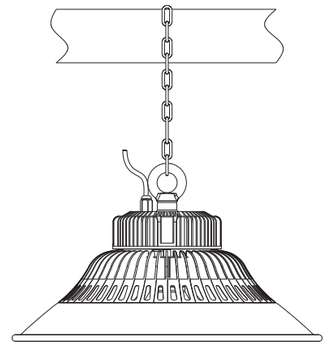

Ring mounted