ABS CE

LM79
LM84

IP 66

Ta 55

Ta -50



Application

Suitable for low installation height region in high temperature, high humidity and vibration environment, like offshore platforms, ship transport corridors, passages, etc.



Characteristics

- It is made using a special aluminum housing, suitable for long-term highly corrosive environment of offshore platforms, chlor-alkali, vulcanization cyanide.
- A full range of high conductivity material accelerate convection cooling structure, effective guarantee long-term use in high temperature environments.
- Variety of light distribution, variety of installation types, an effective solution to beautify workshop and device platform.
- The shell is made of high-tech surface coating technology, corrosion resistant, waterproof and dust proof, suitable for harsh environments.
- Imported light source, high luminous efficiency, low-light failure Taiwan Meanwell power supply or same quality power supply, power factor above 0.98, high reliability and long time service life.
- Independent wiring chamber, safe and easy installation and maintenance.
- It is available to intelligent control functions(1-10VDC, PWM, Carrier DALI etc dimming)
- All exposed fasteners adopt 304 stainless steel(ocean platform 316 stainless steel optional). Effectively ensure light strength and corrosion resistance.

Main Specification

Item	Technical Parameters
Input voltage (V)	90~305VAC
Input frequency	50Hz / 60Hz
Light source	LED
CRI	70(80 optional)
Life time (h)	50,000
CCT	5000K(3000K/4000K optional)
Leading-in cable diameter	ϕ10mm~ ϕ14mm
Terminal	Multi core≤ 4mm²
	Single core≤ 6mm²
Dimension (mm)	ϕ300×290
Net weight (kg)	6.4

Ordering Reference

Order reference	Picture	Rated wattage (W)	Light output (lm)	Space height ratio	Mounting height (m)	Lighting distribution (1000cd/lm)	Equivalent to MH
ZY8605P-L100-40°		100W	11300	0.7	8~12m	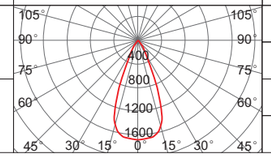	250W
ZY8605P-L120-40°		120W	13000				＞250W
ZY8605P-L150-40°		150W	16500		10~20m		400W
ZY8605P-L180-40°		180W	17400				＞400W

Order reference	Picture	Rated wattage (W)	Light output (lm)	Space height ratio	Mounting height (m)	Lighting distribution (1000cd/lm)	Equivalent to MH
ZY8605P-L100-60°		100W	11200	0.9	8~12m	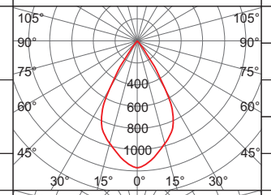	250W
ZY8605P-L120-60°		120W	12900				＞250W
ZY8605P-L150-60°		150W	16500		10~20m		400W
ZY8605P-L200-60°		200W	23100				＞400W
ZY8605P-L240-60°		240W	26700		20~30m		600W~800W
ZY8605P-L100-80°		100W	11500	1. 35	8~12m	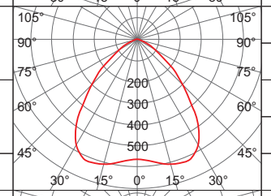	250W
ZY8605P-L120-80°		120W	13200				＞250W
ZY8605P-L150-80°		150W	16800		10~15m		400W
ZY8605P-L200-80°		200W	23700				＞400W
ZY8605P-L240-80°		240W	27200		15~25m		600W~800W
ZY8605P-L100-100°		100W	11600	1. 4	8~12m	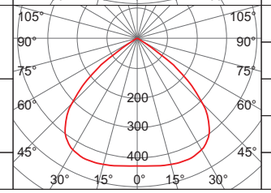	250W
ZY8605P-L120-100°		120W	13400				＞250W
ZY8605P-L150-100°		150W	17000		10~15m		400W
ZY8605P-L200-100°		200W	23900				＞400W
ZY8605P-L240-100°		240W	27400		15~20m		600W~800W

Note 1: the above model with light for the recommended distribution, but also according to the actual need to choose other light distribution.

Drawing of dimension (Dimensions in mm)

Pole mounting

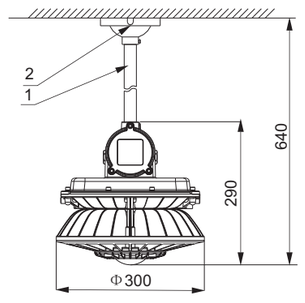

Wall mounting 150deg

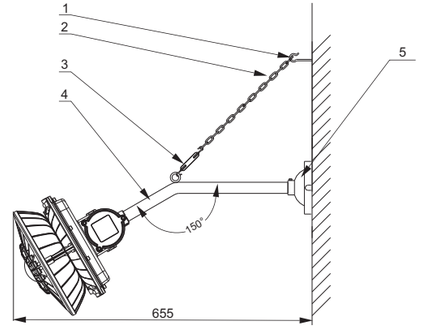

Accessories order information(Pole mounting)

Order number	No.	Specification	Quantity
P14	1	G3/4" pole 30cm	1
	2	Sucker	1

Accessories order information(Wall mounting 150deg)

Order number	No.	Specification	Quantity
P15	1	Expansion screw hook	1
	2	Chain	1
	3	C-C turn buckle	1
	4	G3/4" bend pipe 150Degree	1
	5	Sucker	1