ZY8603AP/BP
LED Emergency Light(Pole)

LM79
LM84
IP 66
Ta 50
Ta -25



ZY8603AP/BP



ZY8603A1P/B1P

Characteristics

- It is made using a special aluminum housing, suitable for long-term highly corrosive environment of offshore platforms, chlor-alkali, vulcanization cyanide a full range of high conductivity material accelerate convection cooling structure, effective guarantee long term use in high temperature environments. variety of light distribution, variety of installation types, an effective solution to beautify workshop and device platform.
- The shell is made of high-tech surface coating technology, corrosion resistant, waterproof and dust proof, suitable for harsh environments.
- Imported light lens, high luminous efficiency, low-light failure, reliability ranking first in the same light source.
- Independent wiring chamber, safe and easy installation and maintenance.
- All exposed fasteners adopt 304 stainless steel.
- Type A: usually can be used for 24 hours lighting lamps and lanterns to use, when the accident to provide emergency lighting;
  Type B : accident to provide emergency lighting.
- B type A type with manual emergency function.

Application

It is suitable for emergency lighting in the installation platform, water control room, fire pump room and other places.



Main Specification

Item	Technical Parameters	
Type	ZY8603AP/ BP	ZY8603A1P/ B1P
Input voltage (V)	90~264VAC	
Rated frequency	50Hz/ 60Hz	
Light source	LED	
CRI (Ra)	70(80 optional)	
Life time (h)	50,000	
CCT	4000K(3000K/5000K optional)	
Leading-in cable diameter	ϕ10~ ϕ14mm	
Terminals	Multi core: ≤2.5mm ^{2}	
	Single core: ≤4mm ^{2}	
Time of charging (h)	>6	>12
Rated capacity	2. 6Ah / 14. 8V	5.2Ah / 14. 8V
Dimension (mm)	ϕ230×240	ϕ230×260
Net weight (kg)	4.2	5.2

ZY8603AP/BP
LED Emergency Light(Pole)

Ordering Reference

Model number	Picture	Rated wattage (W)	Emergency wattage (W)	Emergency duration (min)	Emergency light output (lm)	Light distribution curve(1000cd/lm)	Space height ratio	Equivalent to MH
ZY8603AP-L40-15-60°		40W	15W	120min	1800	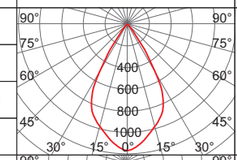	0.9	100W / 35W
ZY8603AP-L40-25-60°		40W	25W	70min	3300			100W / 70W
ZY8603A1P-L40-15-60°		40W	15W	240min	1800			100W / 35W
ZY8603A1P-L40-25-60°		40W	25W	140min	3300			100W / 70W
ZY8603AP-L40-15-80°		40W	15W	120min	1800	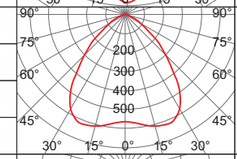	1.35	100W / 35W
ZY8603AP-L40-25-80°		40W	25W	70min	3300			100W / 70W
ZY8603A1P-L40-15-80°		40W	15W	240min	1800			100W / 35W
ZY8603A1P-L40-25-80°		40W	25W	140min	3300			100W / 70W
ZY8603AP-L40-15-100°		40W	15W	120min	1800	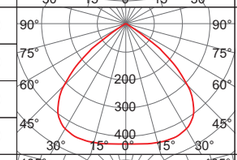	1.4	100W / 35W
ZY8603AP-L40-25-100°		40W	25W	70min	3300			100W / 70W
ZY8603A1P-L40-15-100°		40W	15W	240min	1800			100W / 35W
ZY8603A1P-L40-25-100°		40W	25W	140min	3300			100W / 70W
ZY8603AP-L40-15-200°		40W	15W	120min	1400	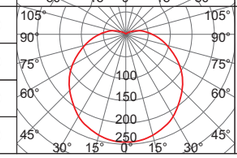	1.75	100W / 35W
ZY8603AP-L40-25-200°		40W	25W	70min	2600			100W / 70W
ZY8603A1P-L40-15-200°		40W	15W	240min	1400			100W / 35W
ZY8603A1P-L40-25-200°		40W	25W	120min	2600			100W / 70W
Auto Emergency								
ZY8603BP-15-60°		/	15W	120min	1800	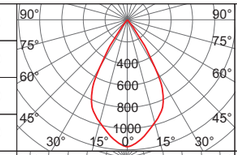	0.9	35W
ZY8603BP-25-60°		/	25W	70min	3300			70W
ZY8603B1P-15-60°		/	15W	240min	1800			35W
ZY8603B1P-25-60°		/	25W	140min	3300			70W
ZY8603BP-15-80°		/	15W	120min	1800	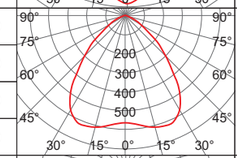	1.35	35W
ZY8603BP-25-80°		/	25W	70min	3300			70W
ZY8603B1P-15-80°		/	15W	240min	1800			35W
ZY8603B1P-25-80°		/	25W	140min	3300			70W
ZY8603BP-15-100°		/	15W	120min	1800	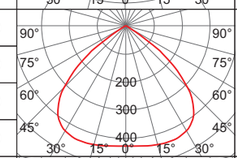	1.4	35W
ZY8603BP-25-100°		/	25W	70min	3300			70W
ZY8603B1P-15-100°		/	15W	240min	1800			35W
ZY8603B1P-25-100°		/	25W	140min	3300			70W
ZY8603BP-15-200°		/	15W	120min	1400	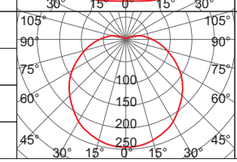	1.75	35W
ZY8603BP-25-200°		/	25W	70min	2600			70W
ZY8603B1P-15-200°		/	15W	240min	1400			35W
ZY8603B1P-25-200°		/	25W	140min	2600			70W

Drawing of Dimension (Dimensions in mm)

Wall mounting 150°

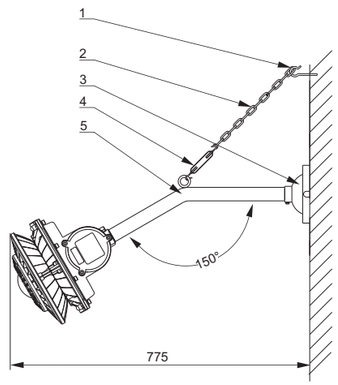

Accessories order information(Wall mounting 150°)

Order number	No.	Specification	Quantity
P15	1	Expansion screw hook	1
	2	Chain	1
	3	C-C turn buckle	1
	4	G3/4" bend pipe 150Degree	1
	5	Sucker	1

Wall mounting 90°

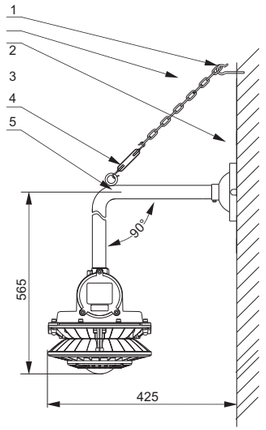

Accessories order information(Wall mounting 90°)

Order number	No.	Specification	Quantity
P16	1	Expansion screw hook	1
	2	Chain	1
	3	C-C turn buckle	1
	4	G3/4" bend pipe 90Degree	1
	5	Sucker	1

Pole mounting

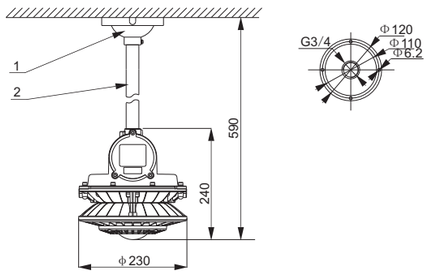

Accessories order information(Pole mounting)

Order number	No.	Specification	Quantity
P14	1	G3/4" pole 30cm	1
	2	Sucker	1

Ceiling mounting

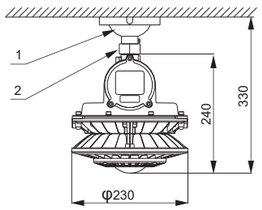

Accessories order information(Ceiling mounting)

Order number	No.	Specification	Quantity
P17	1	Sucker	1
	2	Adapter G3/4"(internal-external)	1

ZY8603AP/BP
LED Emergency Light(Pole)
TORMIN

Flange mounting

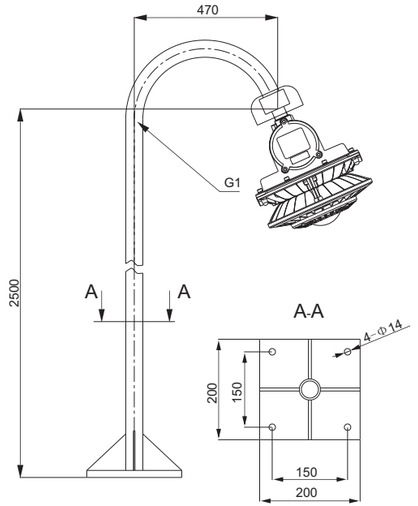

Accessories order information(Flange mounting)

Order number	No.	Specification	Quantity
P06	1	Flange pole	1

Guardrail mounting

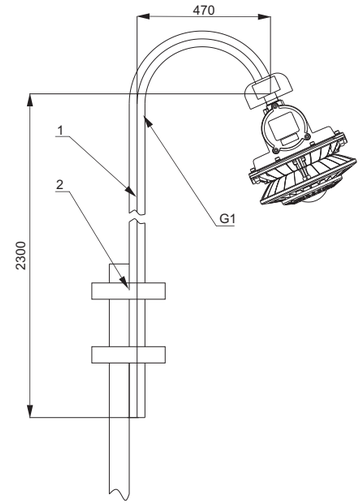

Accessories order information(Guardrail mounting)

Order number	No.	Specification	Quantity
P05	1	Fence pole	1
	2	U type bolts	2